Supplemental Damping and Seismic Isolation for Non-Structural Elements

André Filiatrault, PhD, P. Eng.
Professor of Structural Engineering
State University of New York at Buffalo, USA
&
School for Advanced Studies IUSS Pavia, Italy

2017 Hilti Seismic Academy
October 24, 2017
Milan, Italy

- Last two years presentations focused on the three main challenges associated with the seismic design of non-structural building elements:
  1. Limited information on performance.
  2. Challenges for seismic analysis procedures.
  3. Impediments to incorporating nonstructural seismic design into practice.
- This year's presentation focuses on the application of supplemental damping and seismic isolation systems for improving the seismic response of non-structural elements.

Why should we consider Nonstructural Building Components in Seismic Design?

1. Nonstructural Components represent the major portion of the total investment in typical buildings.

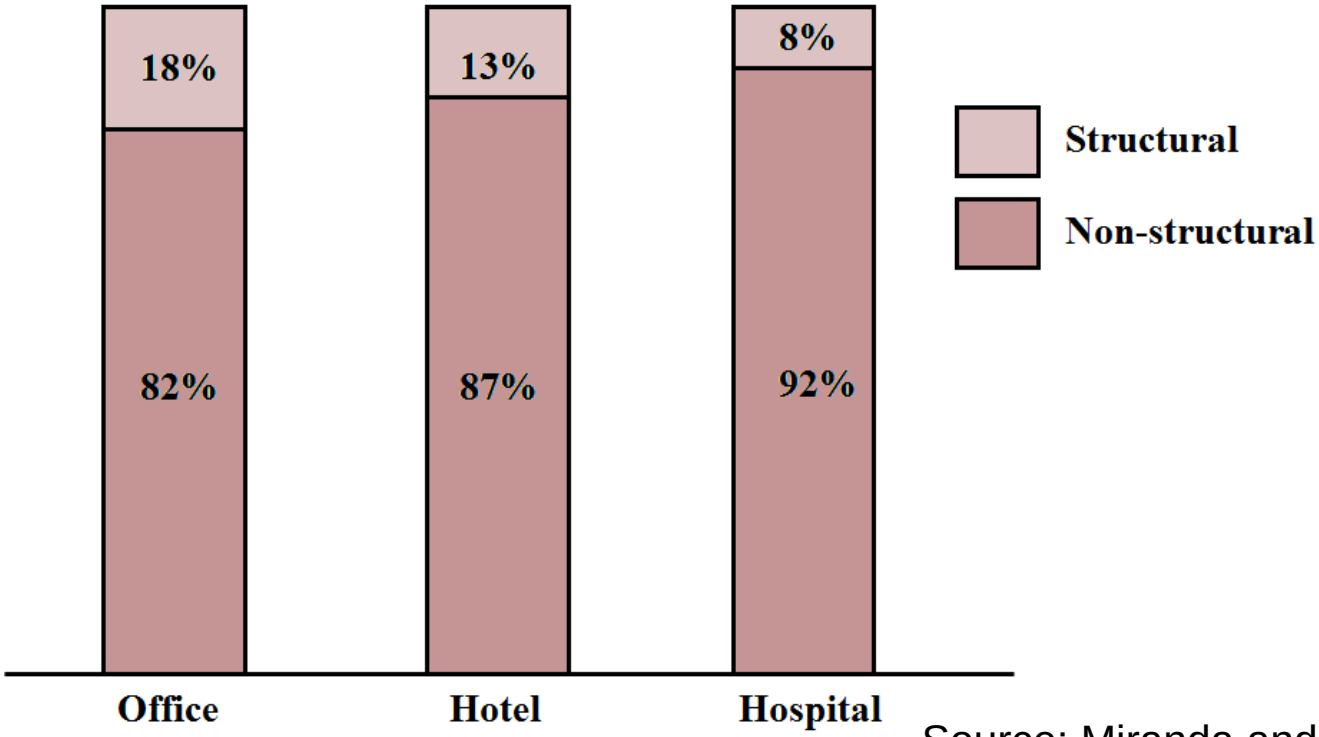

Source: Miranda and Taghavi (2003)

Why should we consider Nonstructural Building Components in Seismic Design?

2. Nonstructural damage can limit severely the functionality of critical facilities, such as hospitals.

Emergency Room of Veteran Administration Hospital following the 1994 Northridge Earthquake in California

Why should we consider Nonstructural Building Components in Seismic Design?

3. Failure of nonstructural components can become a safety hazard or can hamper the safe movement of occupants evacuating or of rescuers entering buildings.

Christchurch Earthquake - February 2011

Source: EERI

Fundamental Concepts of Supplemental Damping and Seismic Isolation

Fundamental Concepts

- Supplemental Damping Systems:
  - Special devices – “mechanical dampers.”
  - Mechanical energy dissipation through heat by movements of the structural elements.
  - Protect main structural elements.
  - Most of seismic energy dissipated mechanically: no damage.

Fundamental Concepts

- Components of Seismic Isolation Systems:
  - Isolator:
    - Lateral stiffness much less than superstructure.
    - Increase effective period of vibration.
    - Sliding surface, rubber pad, etc.
  - Supplemental Damping Mechanism:
    - Dissipate residual seismic input energy.
    - Limits displacements of isolator.
    - Reduces force transmitted to superstructure.

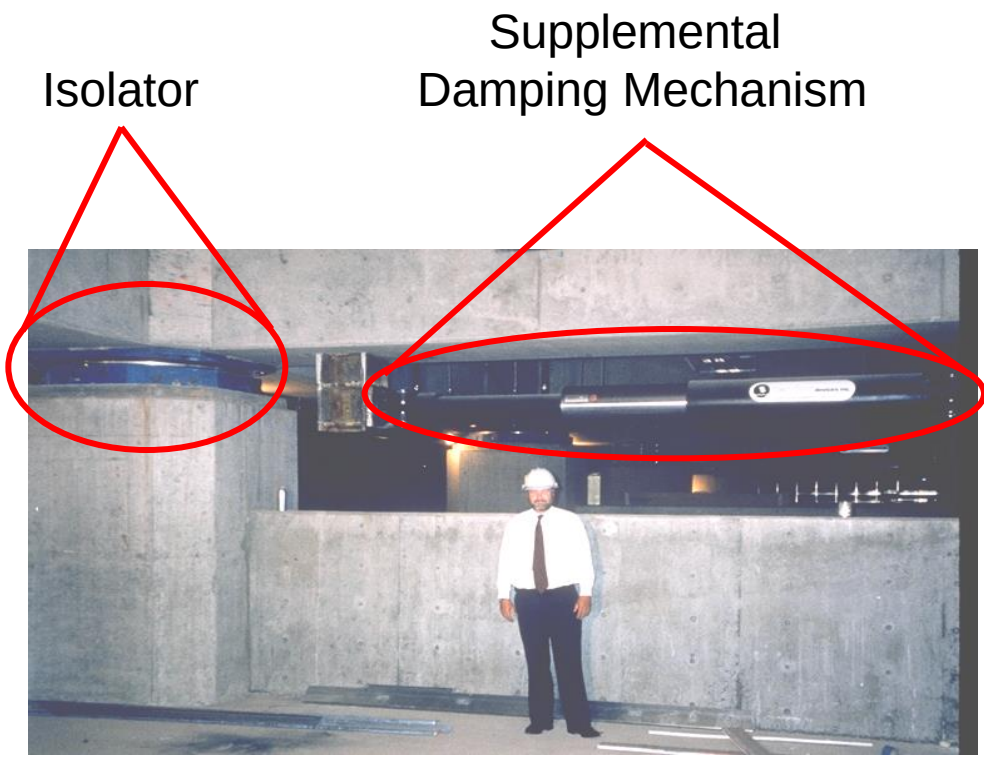

Courtesy of M. Constantinou

Fundamental Concepts

- UCSD Qualification Tests: Rion Antirion Bridge Viscous Dampers

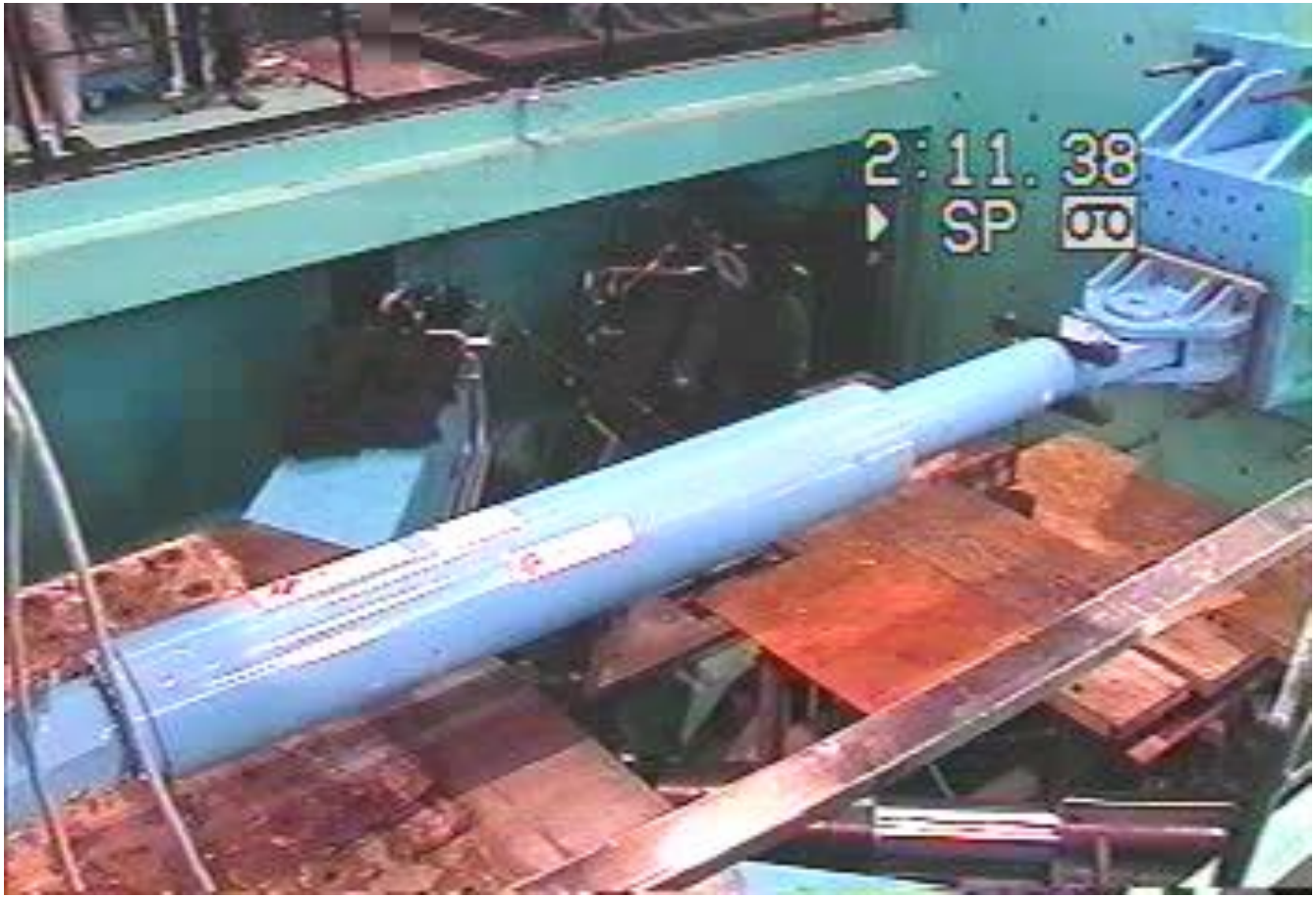

Video

Fundamental Concepts

- E-Defense Experiments: 5-story Base Isolated Steel Frame

Video

Existing Supplemental Damping and Seismic Isolation Systems

Existing Viscous Fluid Dampers

- Typical fluid dampers incorporate a stainless steel piston with a bronze orifice head.
- Device filled with silicone oil.
- Piston head utilizes specially shaped orifices that alter flow characteristics with fluid relative velocity.
- Force produced by damper is generated by the pressure differential across piston head.

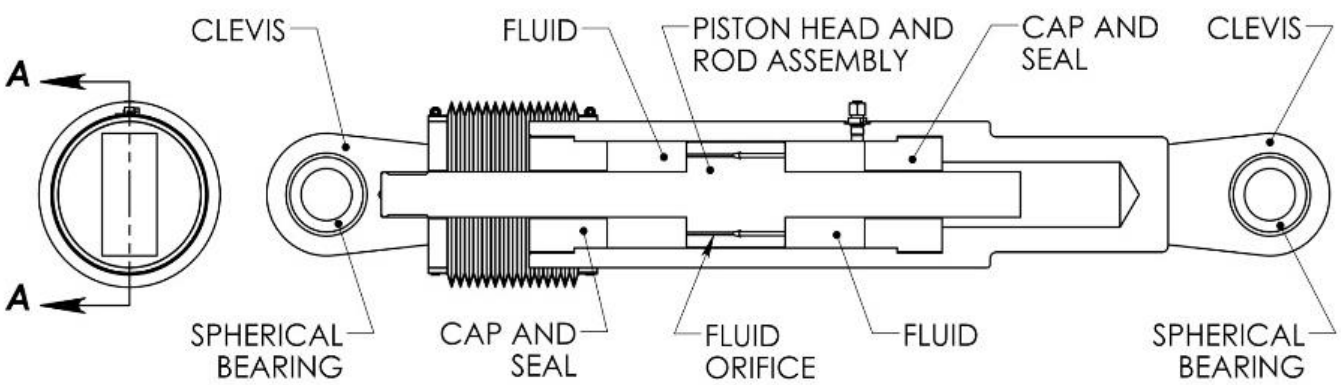

Photo: Courtesy of M. Constantinou

Source: Taylor Devices Inc.

Hysteretic Behaviour of Linear Viscous Dampers

$$F(t) = C_L \dot{x}(t)$$

Constitutive relationship

$$F(t) = \pm C_L \omega \sqrt{X_0^2 - x^2(t)}$$

Force-displacement hysteretic response

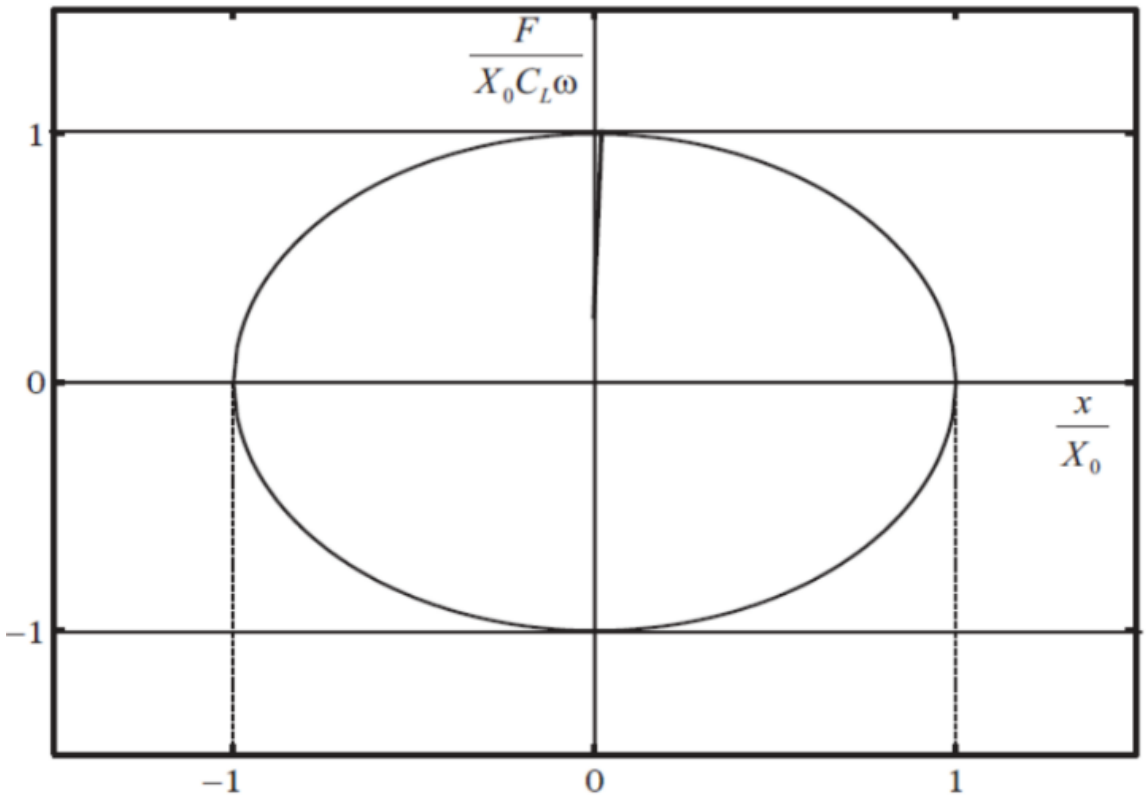

Hysteretic Behaviour of Nonlinear Viscous Dampers

$$F(t) = C_{NL}\,\mathrm{sgn}(\dot{x}(t))\left|\dot{x}(t)\right|^{\alpha_{vd}}$$

Constitutive relationship

$$\frac{F}{C_{NL}(X_0\omega)^{\alpha_{vd}}} = \pm\left(1-\left(\frac{x(t)}{X_0}\right)^2\right)^{\frac{\alpha_{vd}}{2}}$$

Force-displacement hysteretic response

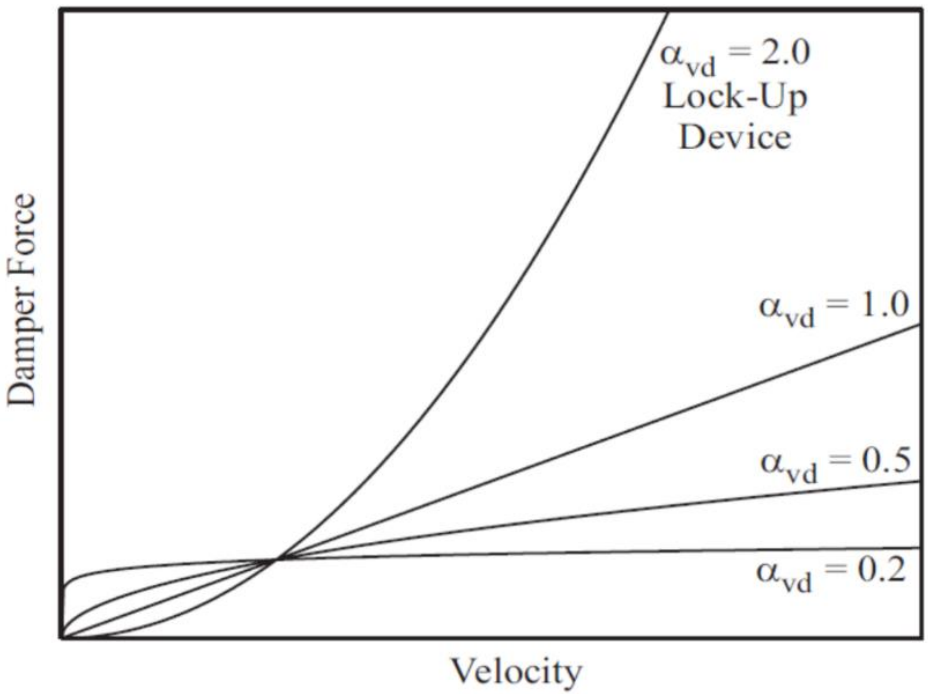

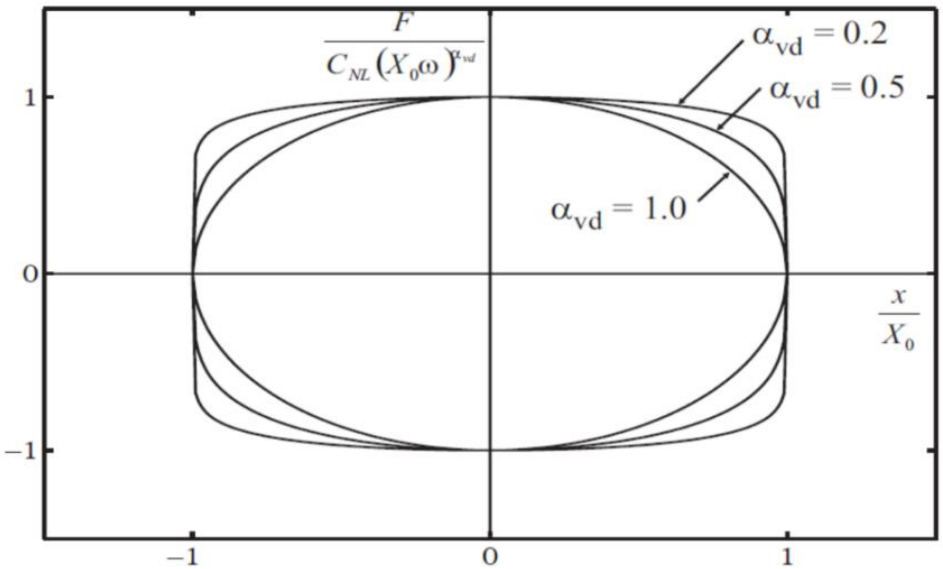

Structural Applications of Viscous Dampers

San Francisco Civic Center, USA
292 Fluid viscous dampers installed in line
Photo courtesy of M. Constantinou

Fluid viscous damper in
Rion-Antirion Bridge, Greece

Laminated Rubber Bearings

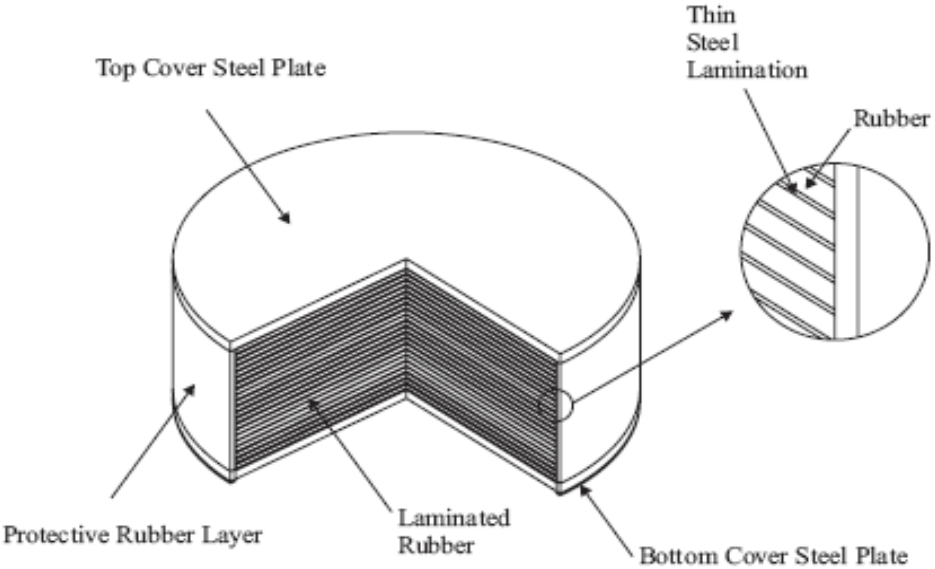

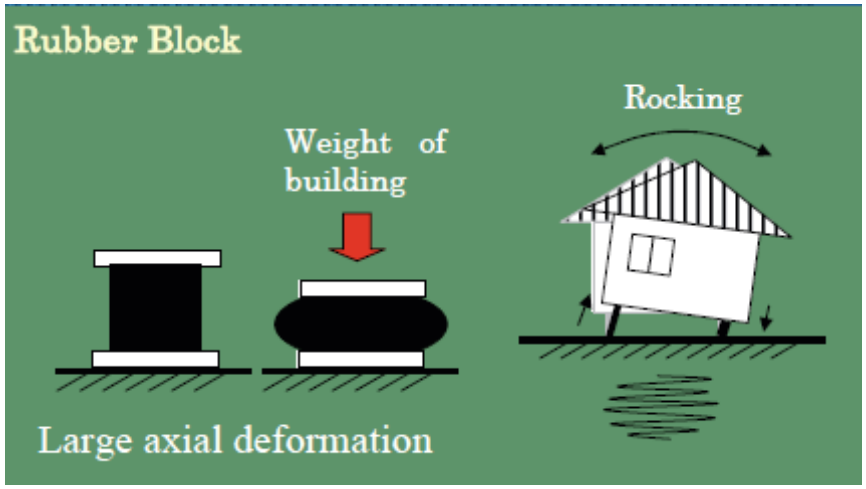

Photo: Courtesy of M. Constantinou

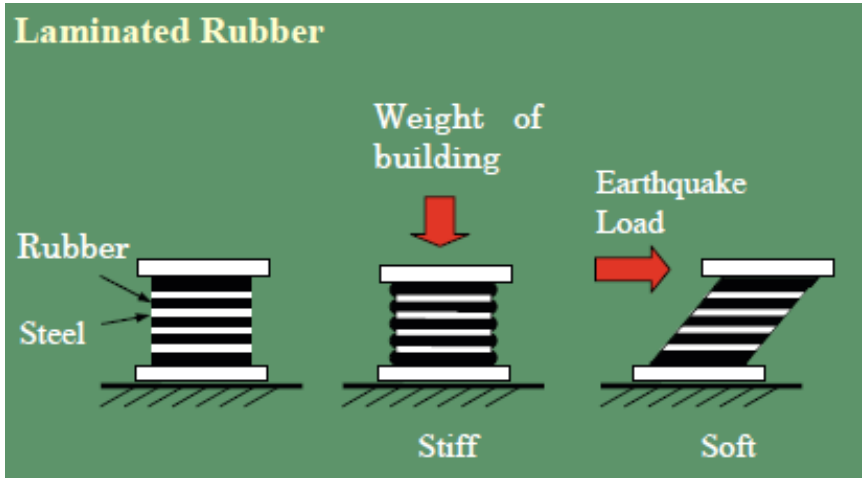

Image T. Saito

Laminated Rubber Bearings

- Elastomeric Bearings for Sakhalin I Orlan Platform.
- Tested at University at Buffalo.

Gravity Test

Shear Test

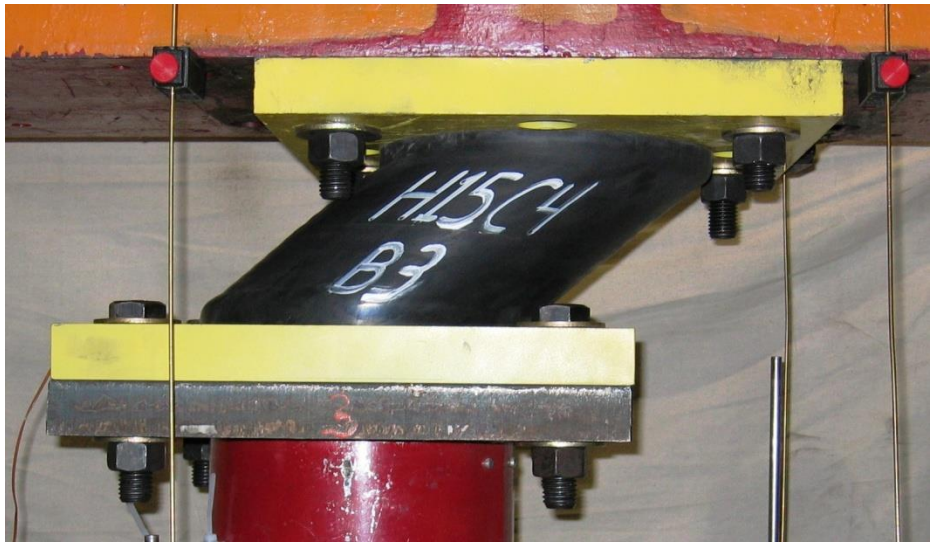

Photos: Courtesy of M. Constantinou

Laminated Rubber Bearings

- Force-Displacement relationship for various types of elastomeric bearings.
- Shear strain defined as lateral displacement/total height of rubber.

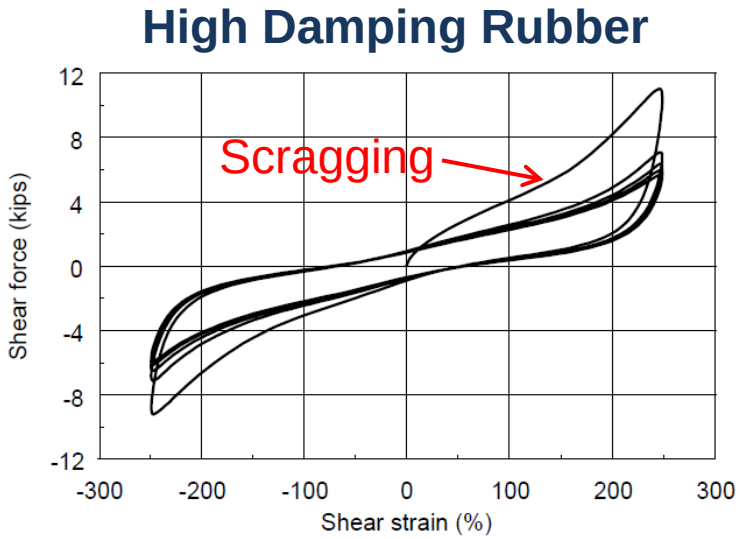

Figure 2. Force-displacement relation for a high-damping elastomeric bearing

(From Thompson et al. 2000)

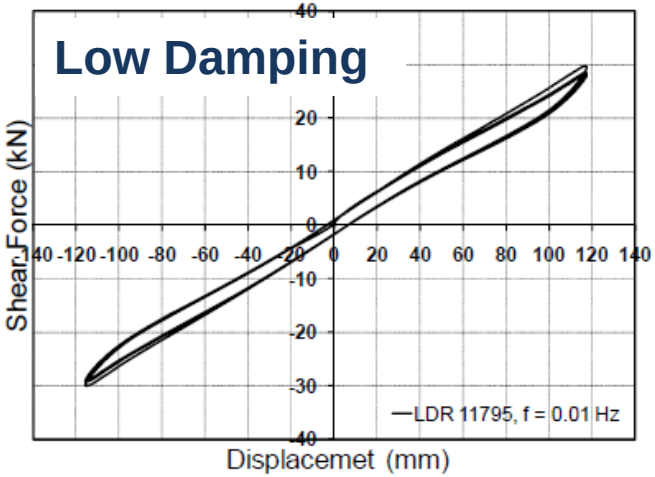

Test 5, f=0.01 Hz, γ=200%

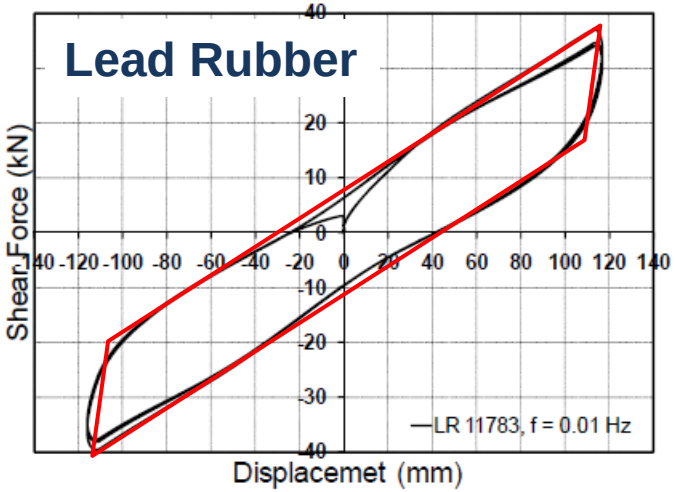

Test 5, f=0.01 Hz, γ=200%

Lead-rubber Bearings

- Lead-rubber bearing composed of a laminated-rubber bearing with a cylindrical lead plug inserted in it center.
- Lead plug introduced to increase damping by hysteretic shear deformations of the lead.

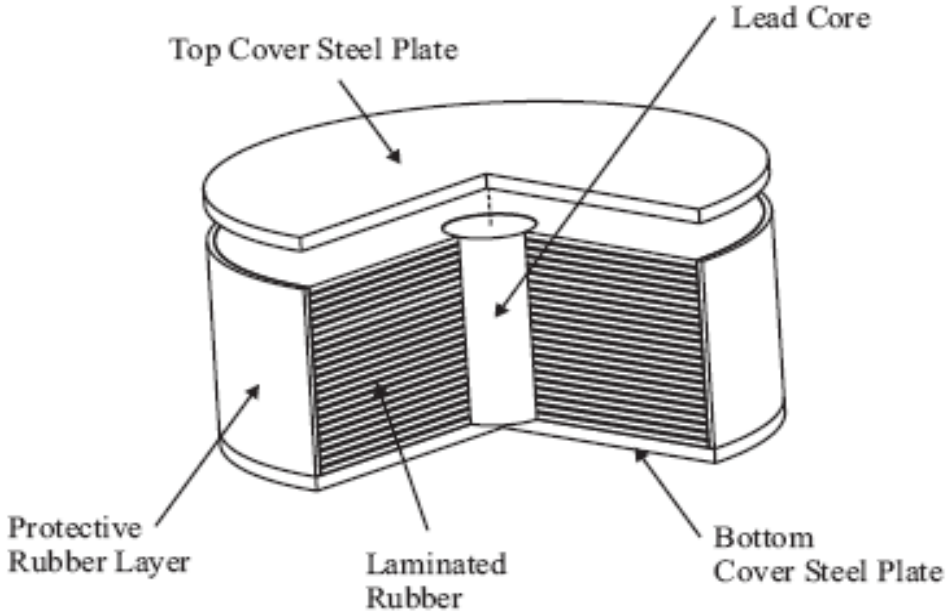

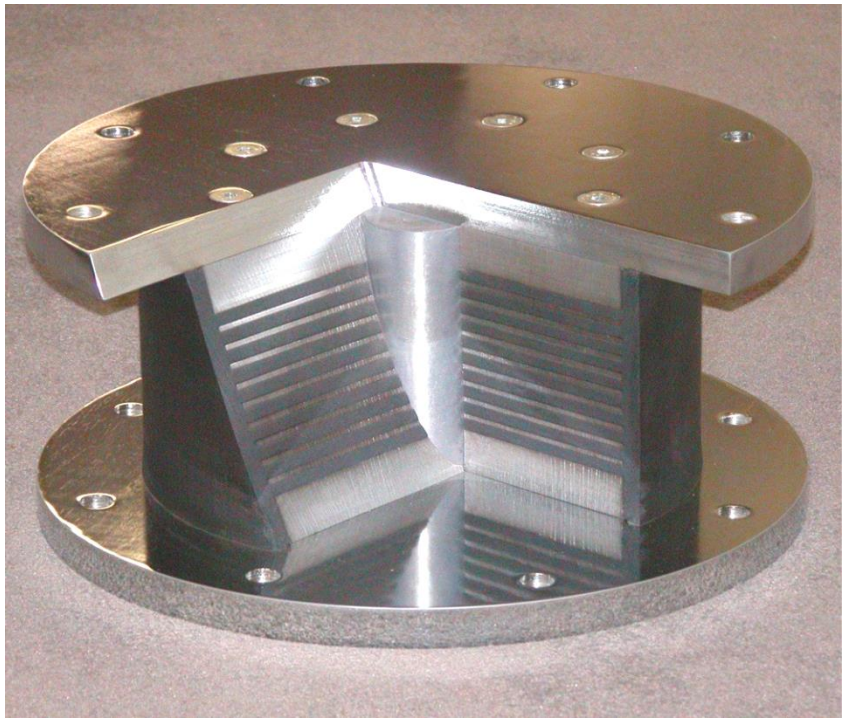

Photo: Courtesy of M. Constantinou

Lead-rubber Bearings

- SRMD Testing Machine, UC-San Diego

DIS LR Bearing, Vertical Load = 2.4 MN, Displacement = 0.56 m, velocity = 1.5 m/s

Issues with Applications of Supplemental Damping and Seismic Isolation for Non-Structural Elements

- Scale:
  - Mass, stiffness and strength of non-structural elements are usually much smaller to that of buildings.
  - Supplemental damping and seismic isolation devices must be adapted.
- Functionality:
  - The incorporation of supplemental damping and seismic isolation devices must not interfere with the functionality requirements of specific non-structural elements.
- Cost

Application of Supplemental Damping and Seismic Isolation Systems for Non-structural Elements

Case Study No. 1: Seismic Isolation of Pallet-Type Steel Storage Racks

Lateral load-resisting systems of steel storage racks

- Moment-resisting frames in the down-aisle (longitudinal) direction.
- Braced frames in cross-aisle (transverse) direction.

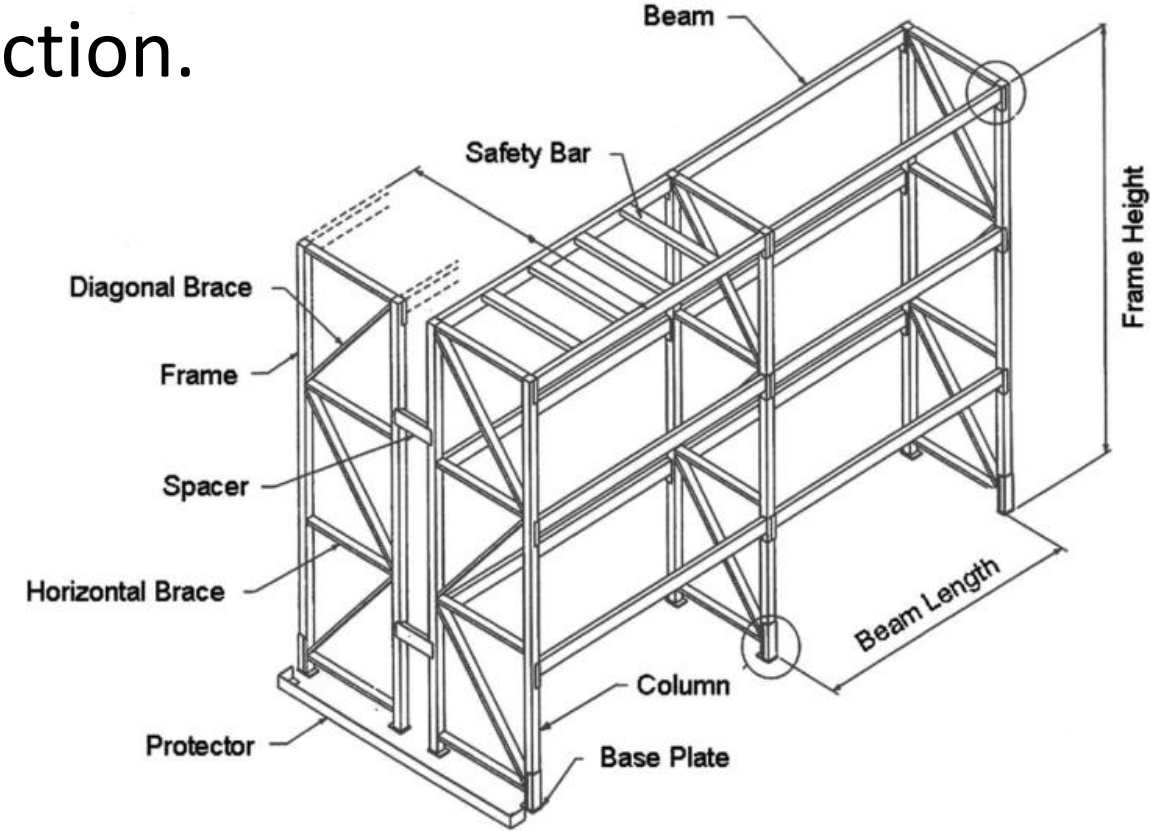

- Collapse of pallet-type steel storage racks have occurred in recent earthquakes

2010 Maule, Chile Earthquake

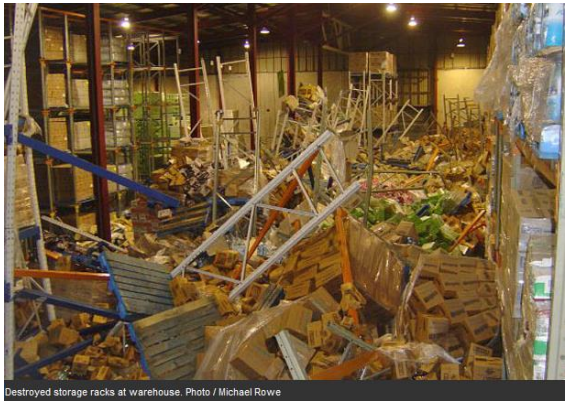

2010 and 2011 Christchurch New Zealand Earthquakes

Seismic Performance Objectives for Storage Racks

- Contained in FEMA 460
  - Two components:
    - Seismic performance of the rack itself
    - Response of stored contents.
  - Life safety performance under Design Earthquake (DE):
    - Failure of components that could result in rack collapse or contents shedding is prevented.
    - Rack overturning is prevented.
    - There is no loss of stored items from rack shelves supported 2.5 m or more above the floor.
  - Collapse prevention performance under Maximum Considered Earthquake (MCE):
    - Rack collapse is prevented.
    - Rack overturning is prevented.
- Very difficult for conventional steel storage rack to meet seismic performance objectives of FEMA-460.

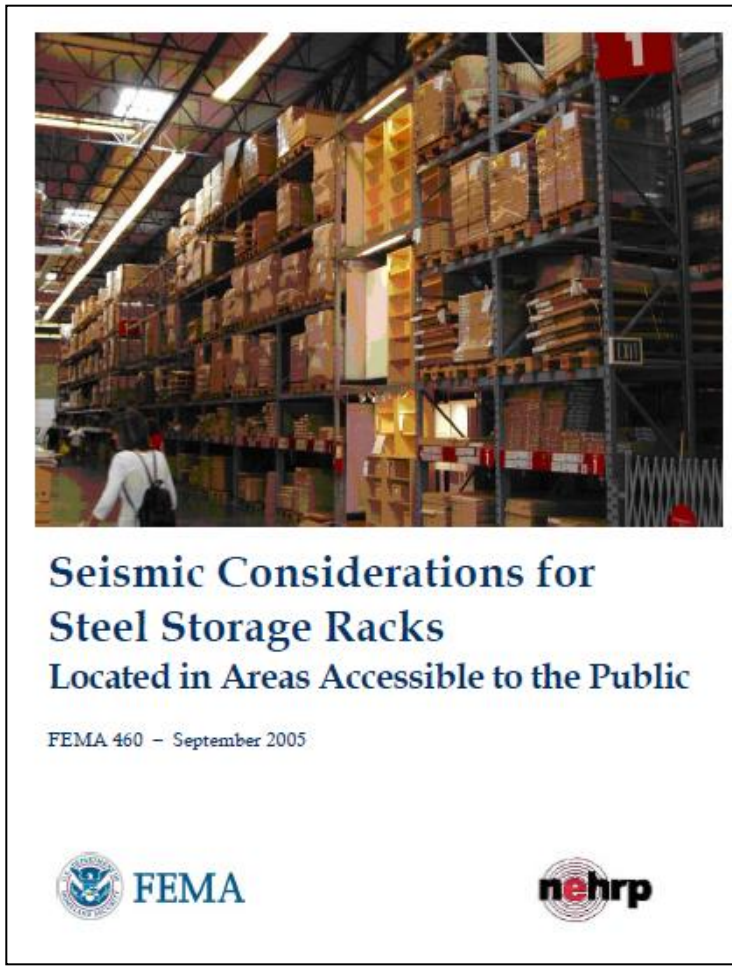

Specific Functionality Requirements for Base Isolation System for Storage Racks

- Provide base isolation in the cross-aisle direction only.
  - Reduce horizontal accelerations in cross-aisle direction to reduce content spillage and structural damage.
  - Range of down-aisle natural periods of typical rack structures already similar to typical base isolated structures (≥ 1.5 sec).
  - Horizontal accelerations in down-aisle direction do not contribute substantially to content spillage.
- No interference with normal material handling operations.

Base Isolation System for Storage Racks

Courtesy of Ridg-U-Rak Inc.

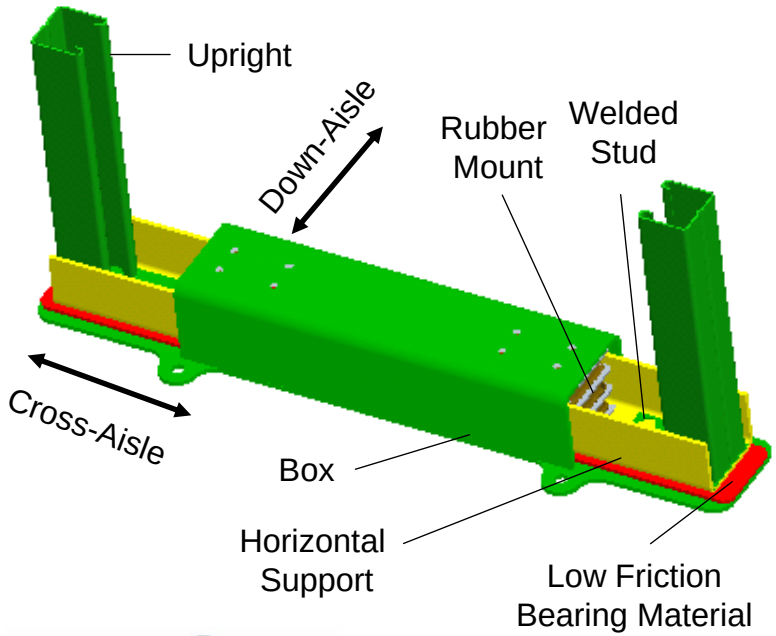

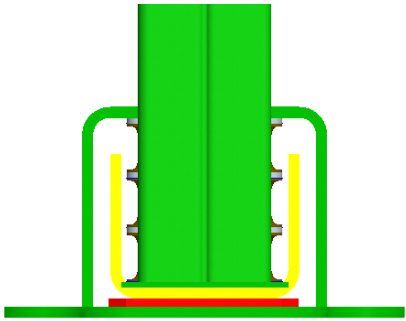

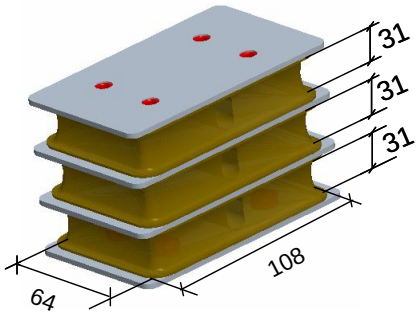

All Dimensions in mm

Base Isolation System for Storage Racks

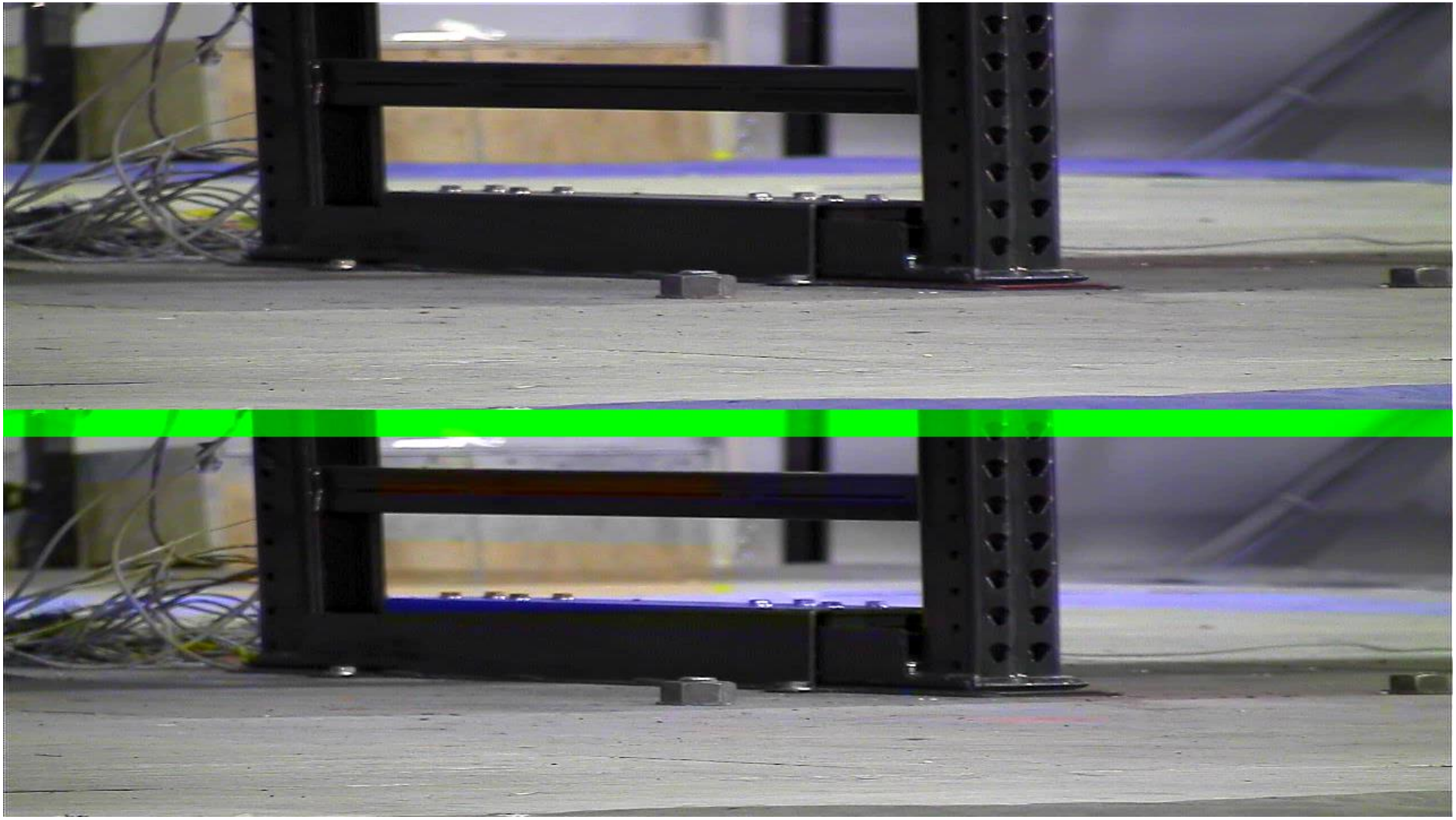

Courtesy of Ridg-U-Rak Inc

Base Isolation System for Storage Racks

Isolated Rack

Conventional Rack

Video

Courtesy of Ridg-U-Rak Inc

Application of Supplemental Damping and Seismic Isolation Systems for Non-structural Elements

Case Study No. 2: Bracing of Thin-wall Piping Systems with Viscous Dampers

Motivation

- Suspended water supply (distribution and circulation) piping systems are key non-structural elements that ensure the functionality and safety of critical facilities.
- Design criteria not based on seismic criteria.
- Recent earthquakes worldwide have demonstrated the vulnerability and of suspended water supply piping systems.

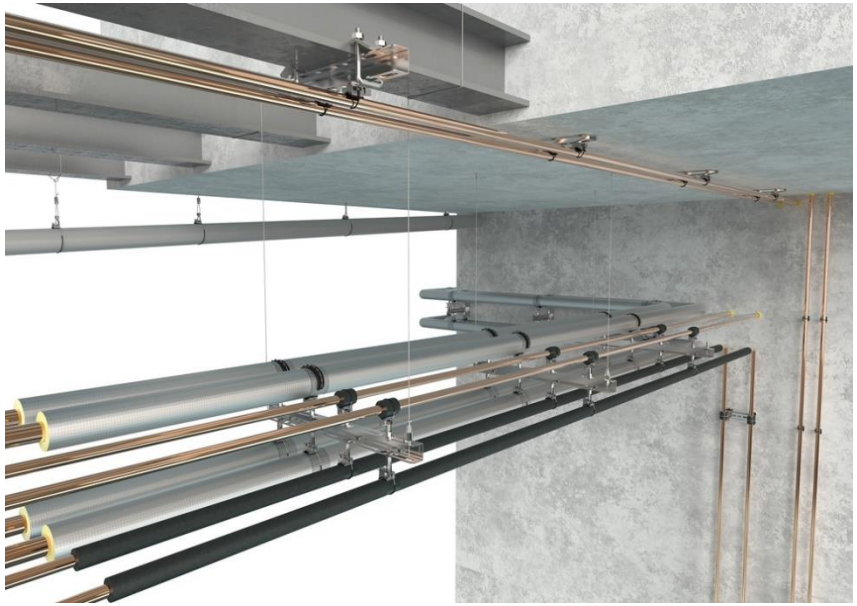

Source: Gripple UK

Motivation

- Limited research on the performance of suspended water piping systems.
- Conventional bracing of suspended thin-wall (less than 2 mm thick) water piping systems does not guarantee adequate seismic performance.
  - Seismic design loads on bracing elements based on mass of water and piping materials.
  - Piping materials assumed rigid.
  - Because thin-wall pipes are much more flexible than bracing members, significant dynamic response of long piping runs between bracing elements can occur.
    - Could cause failure of joints and leakage.
- Flexibility of thin-wall piping is not addressed in current building codes.

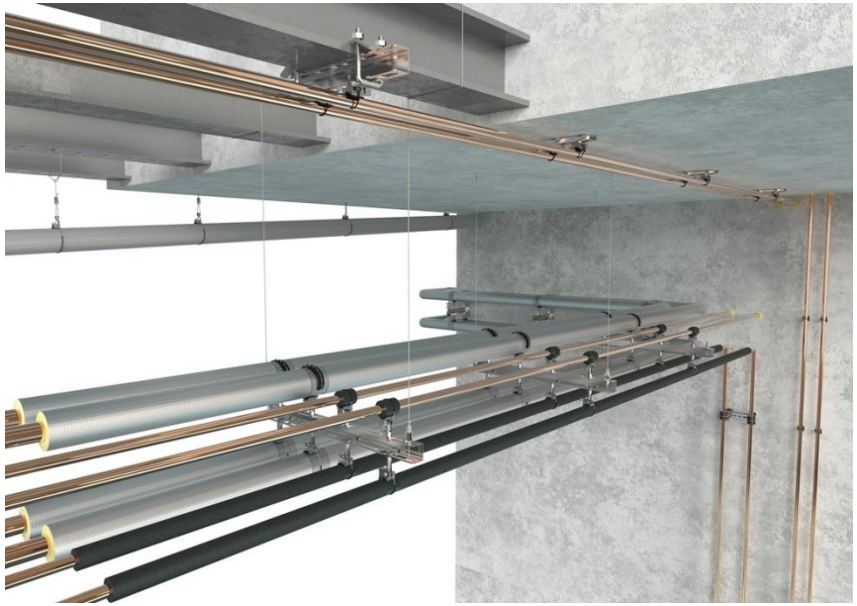

Source: Gripple UK

Research Question

- Can the small viscous damping devices in line with bracing elements of thin-wall water supply piping systems in order to improve their seismic performance?

Case Study

- Four-storey steel building
  - Square in plan.
  - Braced by four identical perimeter moment-resisting frames.
  - All interior frames support gravity loads only.
- Firm ground site in Europe
  - Design (10% in 50 years) peak ground acceleration = 0.4g.

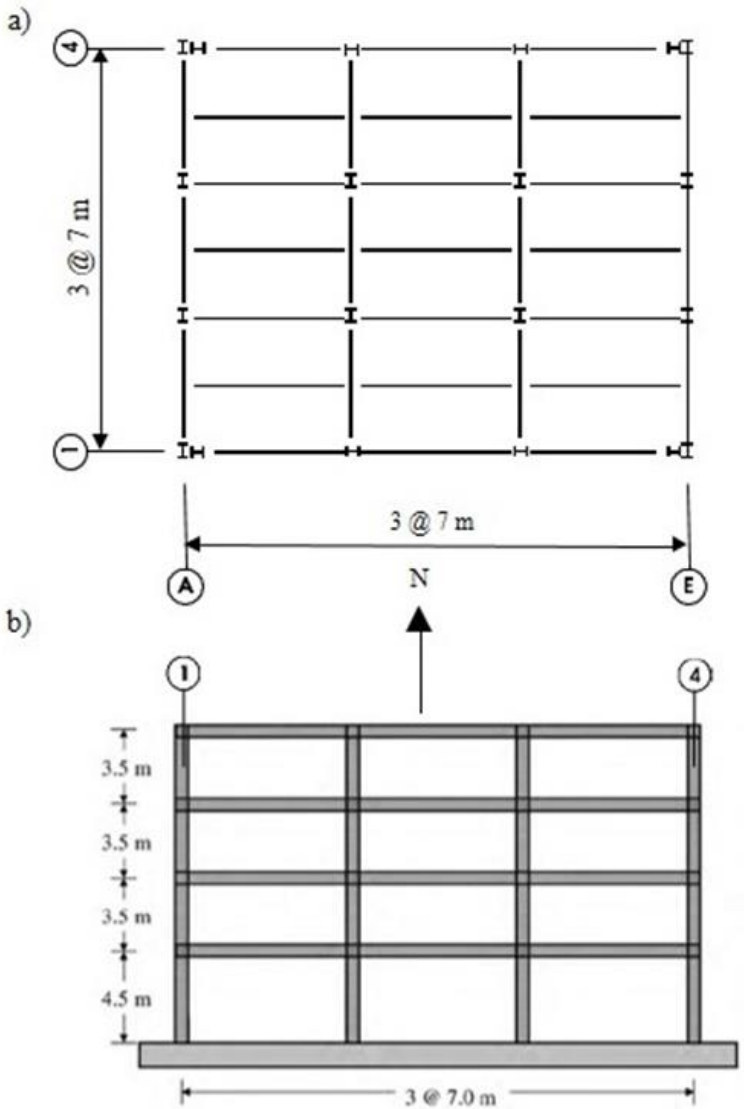

Case Study

- Suspended thin-wall water supply piping system suspended from top floor case study building.
  - Overall footprint of approximately 13m by 4m.
  - Three separate pipelines:
    1) Cold-water distribution line.
    2) Hot-water distribution line.
    3) Hot-water recirculation line.
  - All pipes made of AISI316 stainless steel.
  - Pipe diameter of 18 mm with a thin-wall thickness of 1mm (18 x 1 mm).
- Ensemble of 22 three-dimensional floor motions generated for two seismic intensities:
  1. Design earthquake (DE) intensity with a median PGA of 0.4 g.
  2. Maximum considered earthquake (MCE) intensity with a median PGA of 0.6 g.
- Time-history analyses conducted on the piping system.

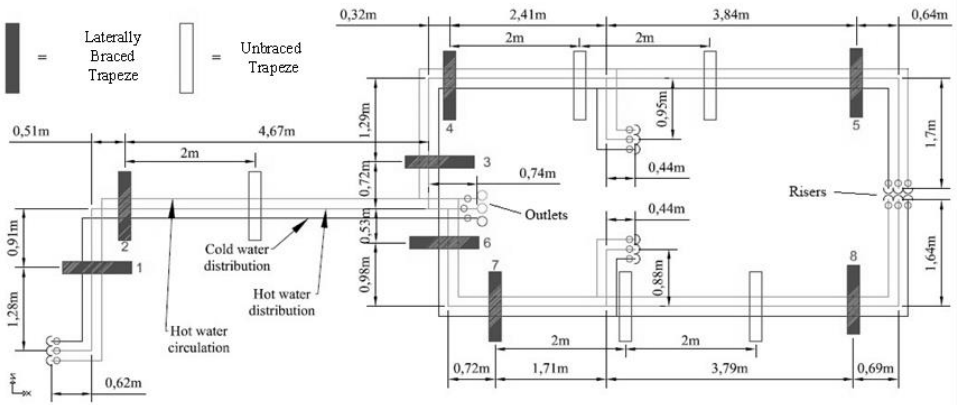

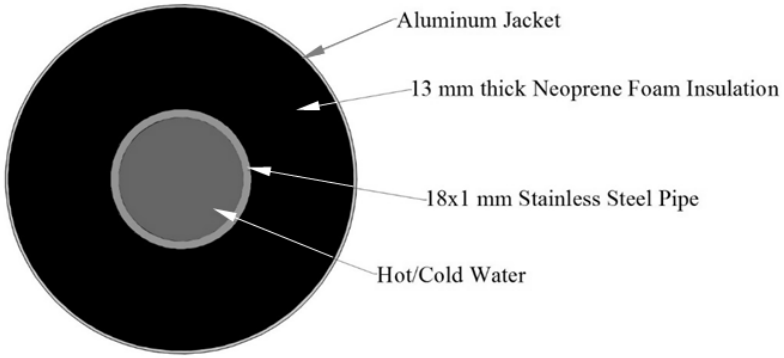

Case Study

- Laterally Braced vs Viscously Damped Braced Trapezes

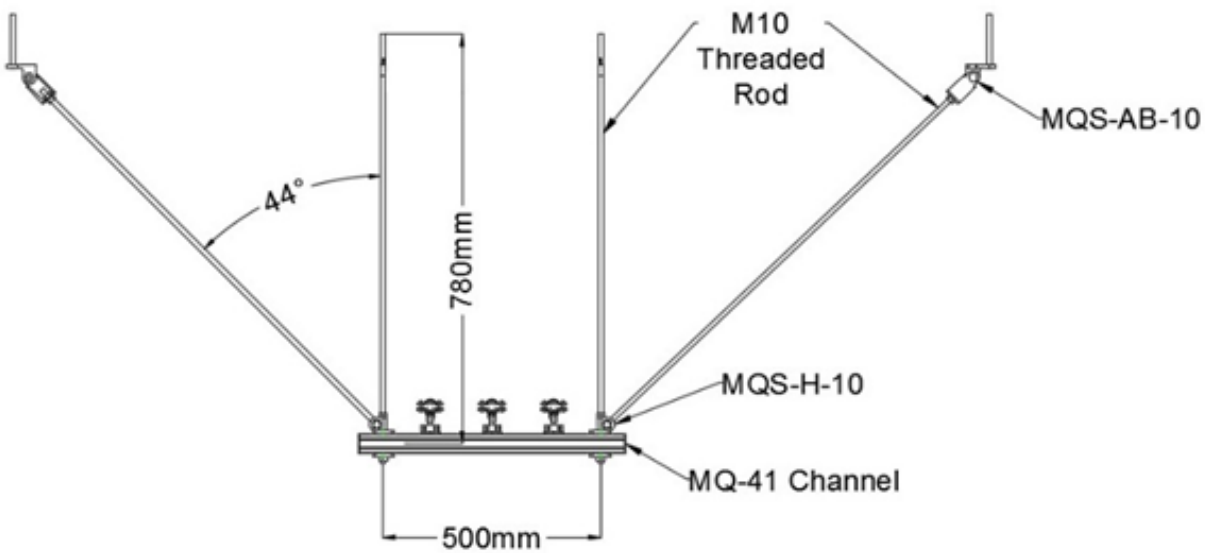

Laterally Braced Trapeze

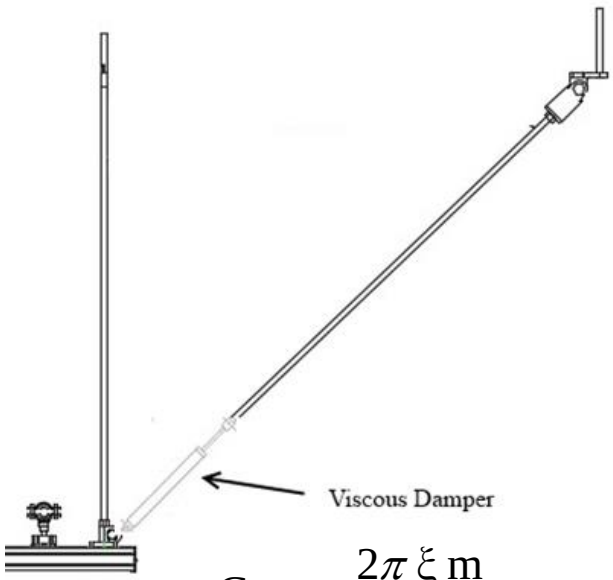

$$C_L = \frac{2\pi \xi m}{T_1 N_T \cos^2\theta}$$

Viscously Damped Braced Trapeze

Parametric Study

- Maximum Pipe Horizontal Drifts.
- Maximum Axial Forces in Vertical Threaded Rods.
- Maximum Bending Moments in Pipes.

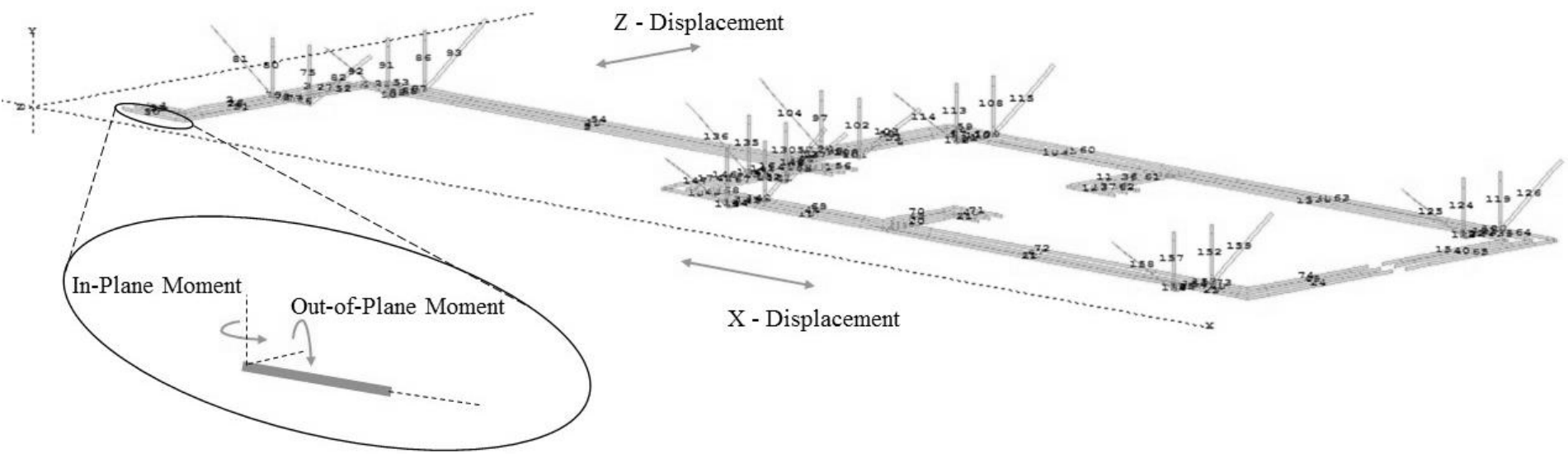

Parametric Study

- Maximum Pipe Horizontal Drifts:

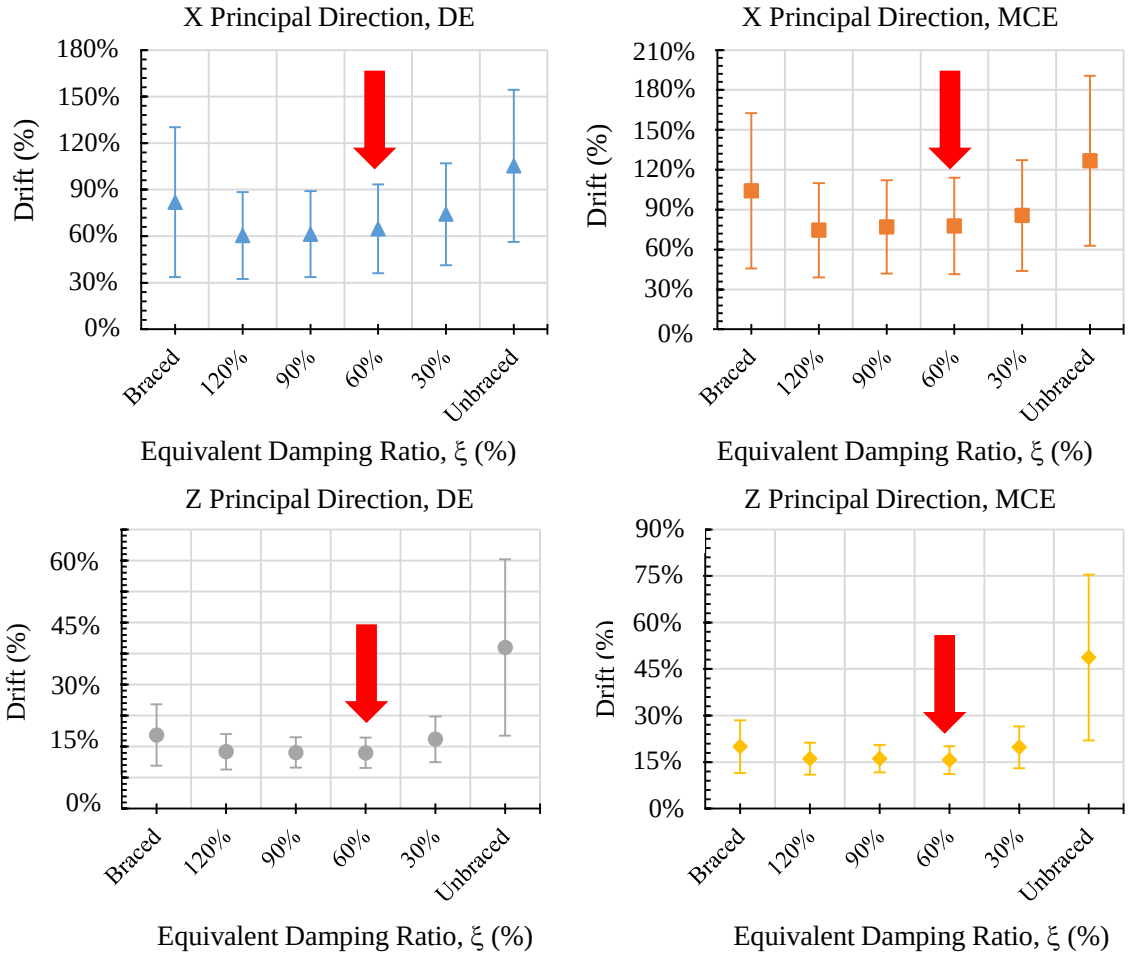

Parametric Study

- Maximum Axial Forces in Vertical Threaded Rods:

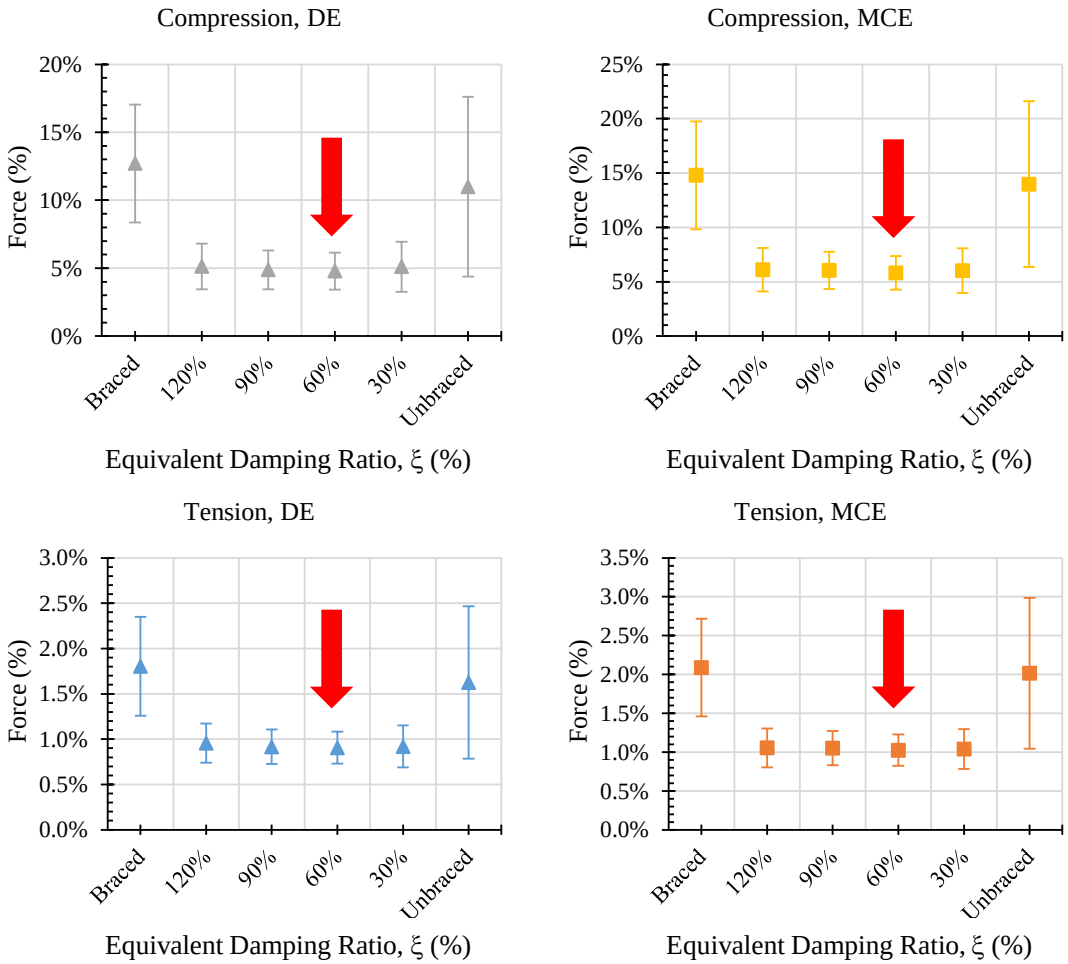

Parametric Study

- Maximum Bending Moments in Pipes:

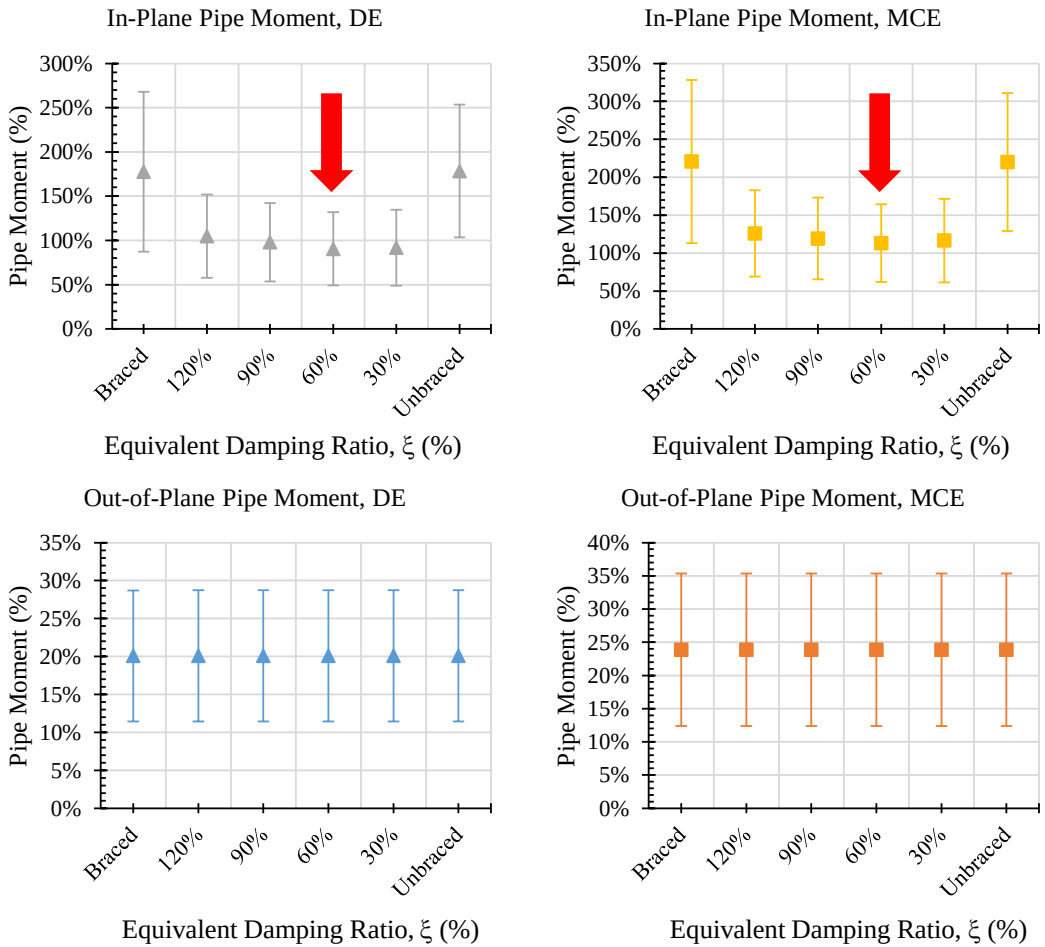

Practical Implementation

taylor devices inc.

D-SERIES LINEAR DAMPERS

Parameters	Design Requirements (MCE Intensity Level)	Taylor Devices D-Series Model 1 x 6D TC Linear Damper Characteristics
Damping Force	260 N	2000 N maximum
Peak Velocity	0.86 or 1.3 m/s	0.03 m/s to 5 m/s
Damping Constant	204 N-s/m or 304 N-s/m	67,000 N-s/m maximum
Stroke	62 mm	± 76.2 mm

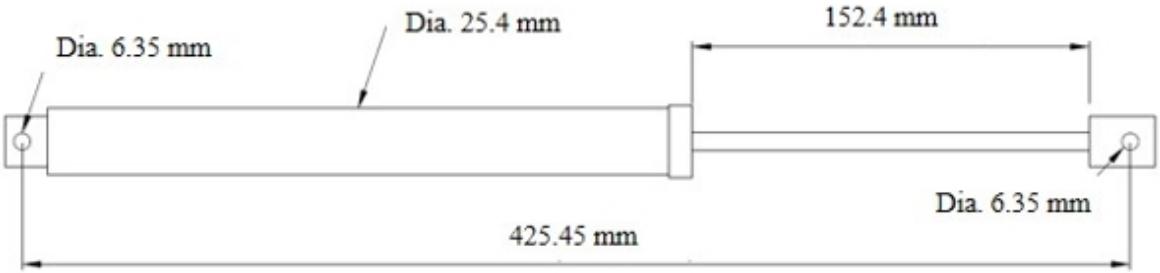

Final Thoughts

- In 1914, Professor Modesto Panetti from Istituto Superiore di Torino wrote:
  - *…the effects of earthquakes on structures are in fact a structural dynamics problem, which is much too complicated to address…*
- In 2017, the earthquake engineering community still believes:
  - *…the effects of earthquakes on nonstructural nomponents are in fact a structural dynamics problem, which is much too complicated to address…*
- Today, I believe that we have the tools to develop performance-based seismic design for nonstructural components the same way it was done for structural components and supplemental damping and seismic isolation can play an important role.

Thank you!

What the client wanted.

The architect's solution.

The structural engineer's solution.

The non-structural engineer's Solution.