Seismic Academy 2017

ORDINE DEGLI INGEGNERI
DELLA PROVINCIA DI MILANO

POLITECNICO DI MILANO

24 Ottobre 2017 – h. 10:15-19:00

Unicredit Pavilion
Piazza Gae Aulenti, 10
Milano

ANRA
Associazione Nazionale dei Risk Manager e Responsabili Assicurazioni Aziendali

POLITECNICO
MILANO 1863

EUCENTRE
FOR YOUR SAFETY.

Fasteners in seismic design

Prof. Franco Mola

Professore Ordinario - Reinforced and Prestressed Concrete Structures

Dipartimento ABC - Politecnico di Milano

INTRODUCTION

- The use of mechanical fasteners to connect structural parts, either homogeneous or non-homogeneous, is widespread in design practice. In this framework, fasteners are routinely used for many different applications, both in the field of retrofitting and of new design

- For existing structures, the main application is for static or, more commonly, seismic retrofitting or upgrading

- A broad classification of these interventions can be made based on the intensity of the transferred actions and on the consequences of a failure of the connection.

- Both patented 'commercial' fastening systems and specifically designed mechanical connection systems are commonly referred to as 'mechanical fasteners'

- Patented fasteners must be certified as a 'system': specific tests and production control protocols apply and the limits to their use must be clearly specified in the product factsheet

- As for 'design specific' connection systems, they can be divided into different categories, depending on the intensity of the transferred action. It is a direct responsibility of the structural designer to verify the effectiveness of the designed systems in transferring the design actions with an adequate safety coefficient, taking into account the type of actions, the failure mechanism and its consequences

RETROFITTING OF EXISTING R.C. STRUCTURES
Slabs

40”x50” hole

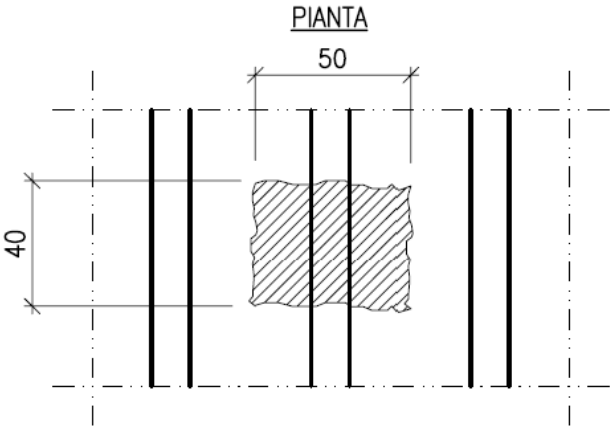

RETROFITTING OF EXISTING R.C. STRUCTURES
Slabs

Existing slab: damage

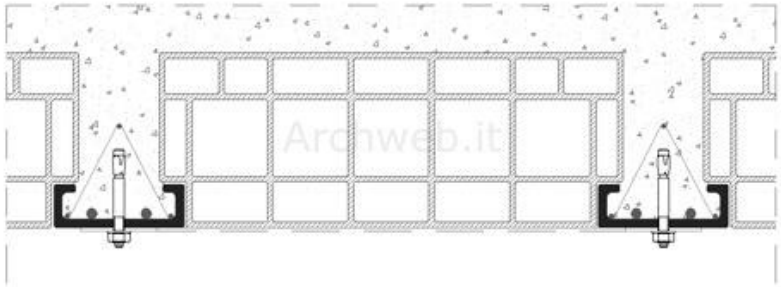

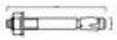

Connection to the existing structure

RETROFITTING OF EXISTING R.C. STRUCTURES
Slabs

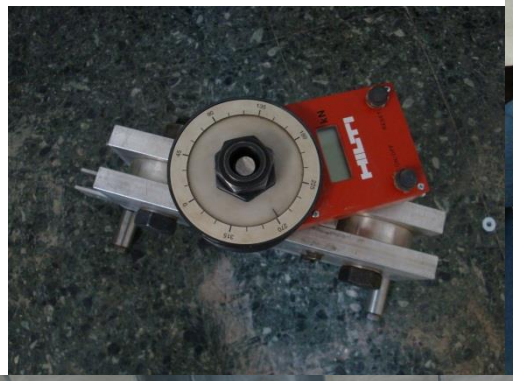

Load tests

RETROFITTING OF EXISTING R.C. STRUCTURES
Walls

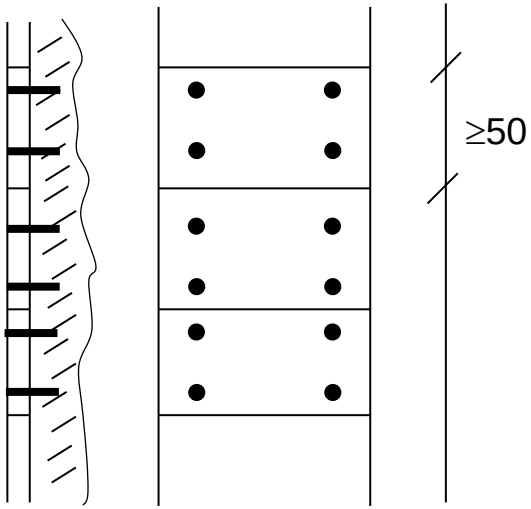

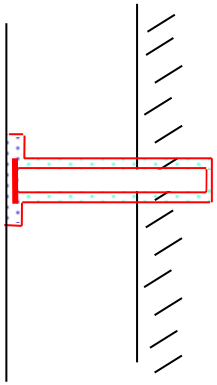

RETROFITTING OF EXISTING R.C. MASONRY STRUCTURES
Walls strengthened with expansive concretee/mortar layers

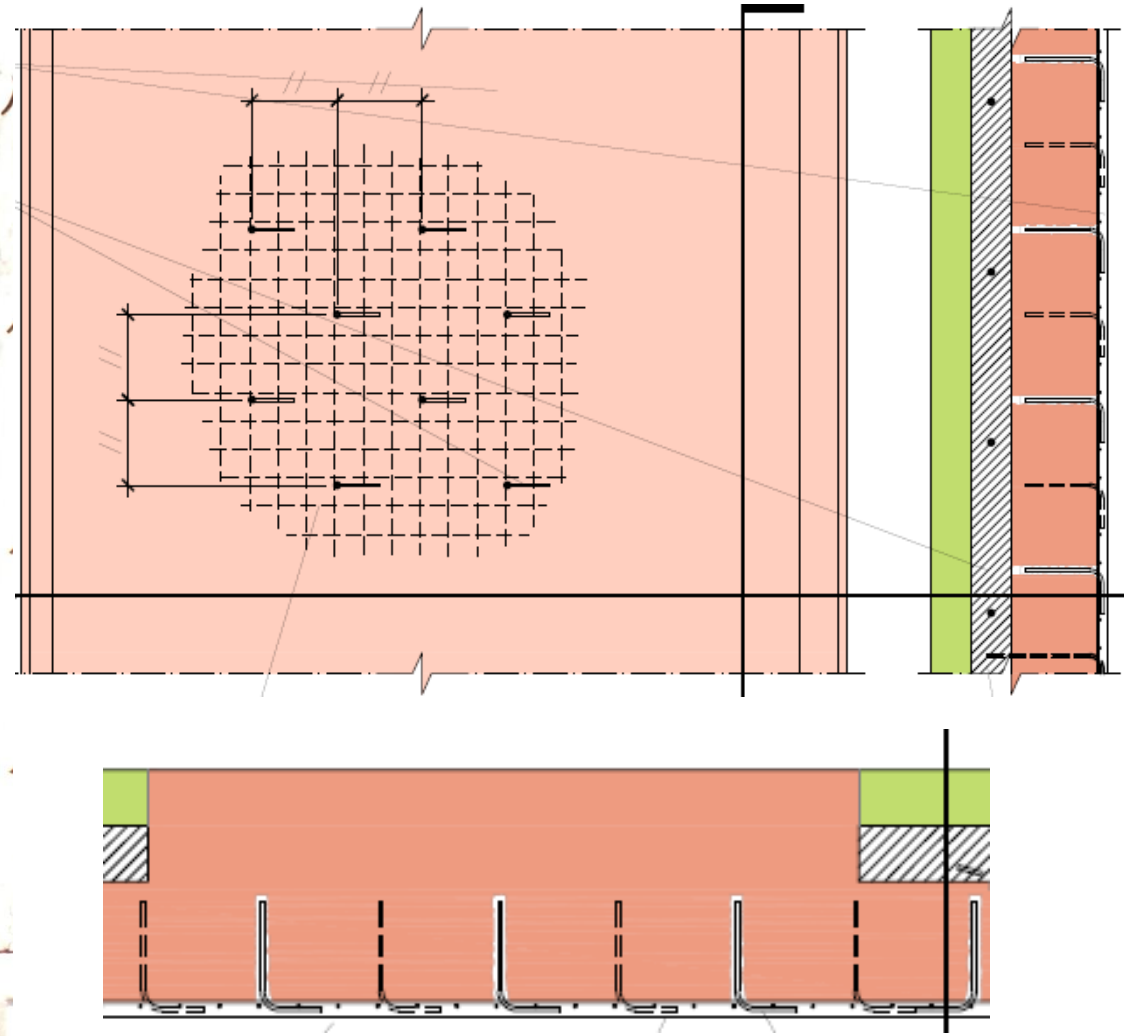

RETROFITTING OF EXISTING R.C. BRIDGES
Highway flyovers

RETROFITTING OF EXISTING R.C. BRIDGES
Details of strengthened structural elements

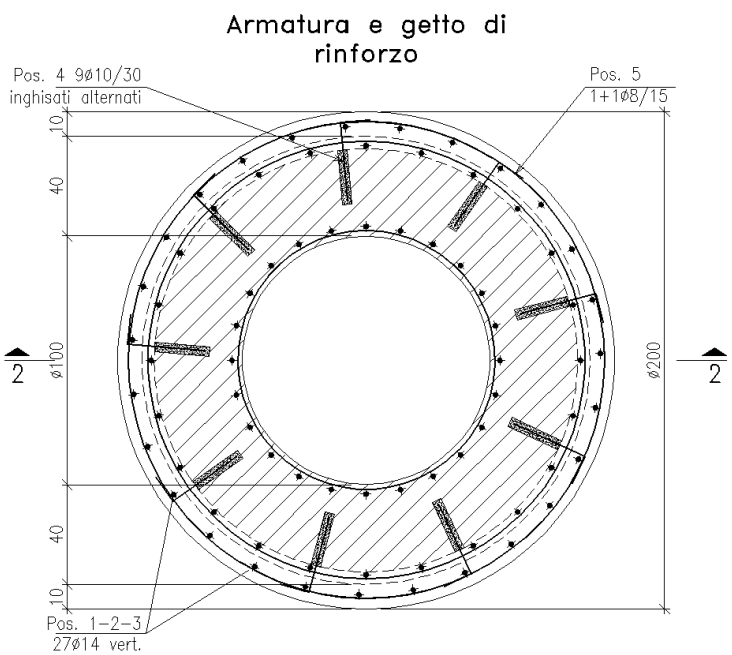

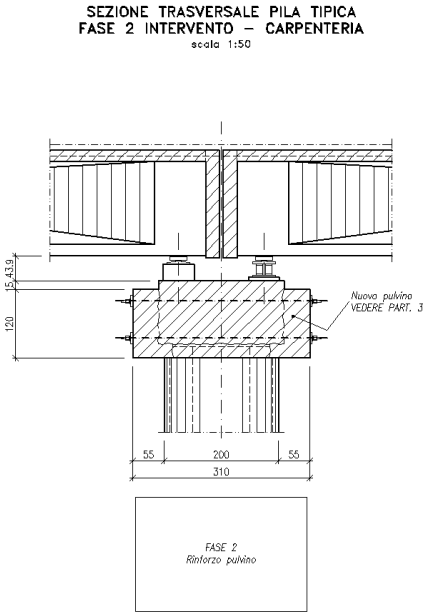

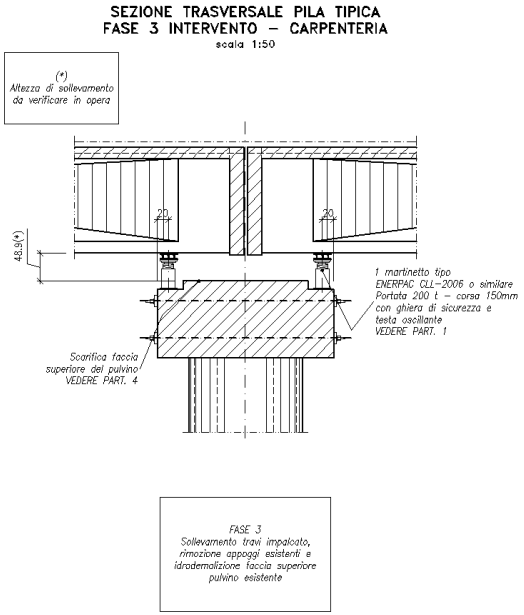

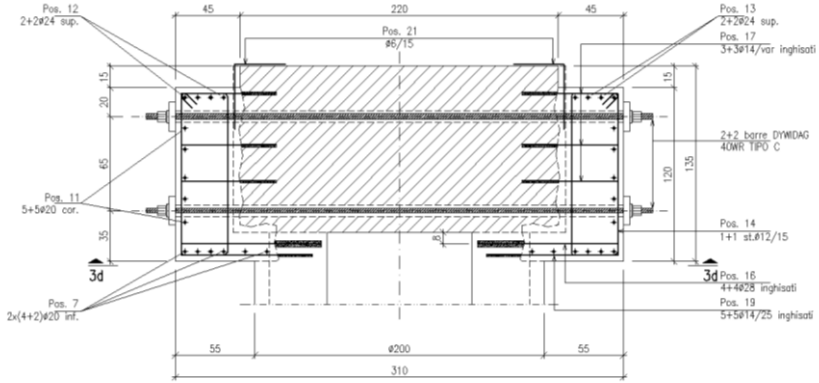

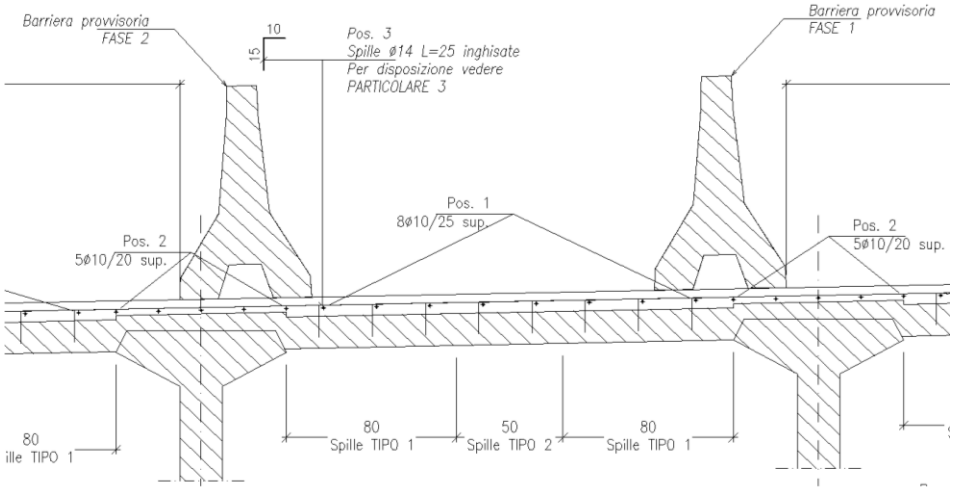

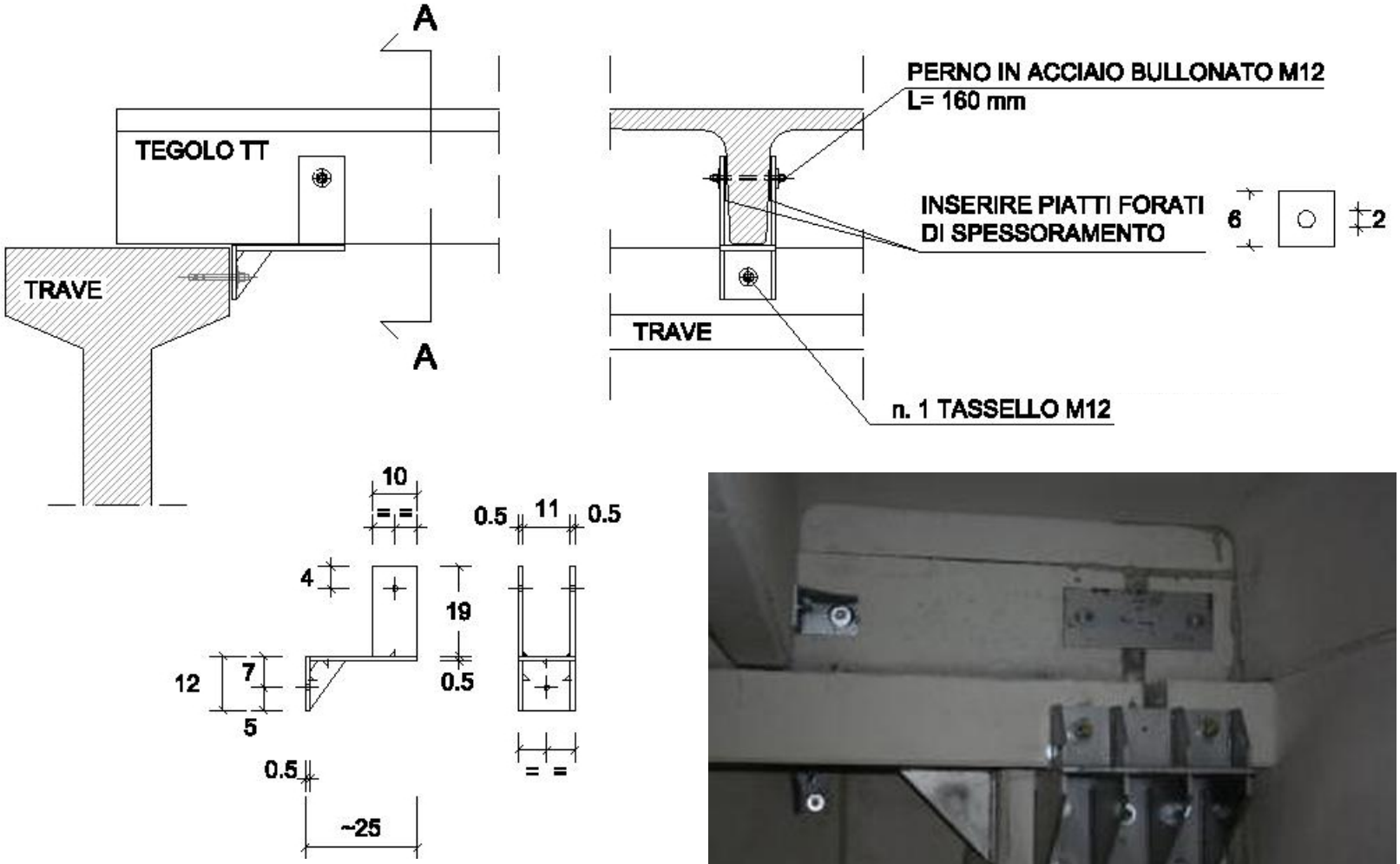
A
TEGOLO TT
TRAVE
A
PERNO IN ACCIAIO BULLONATO M12
L= 160 mm
INSERIRE PIATTI FORATI
DI SPESSORAMENTO
6
2
TRAVE
n. 1 TASSELLO M12
10
0.5
11
0.5
4
19
12
7
0.5
5
0.5
~25

HIGH PERFORMANCE CONNECTION FOR STRUCTURAL REPAIR

Extensive cracking in a tunnel

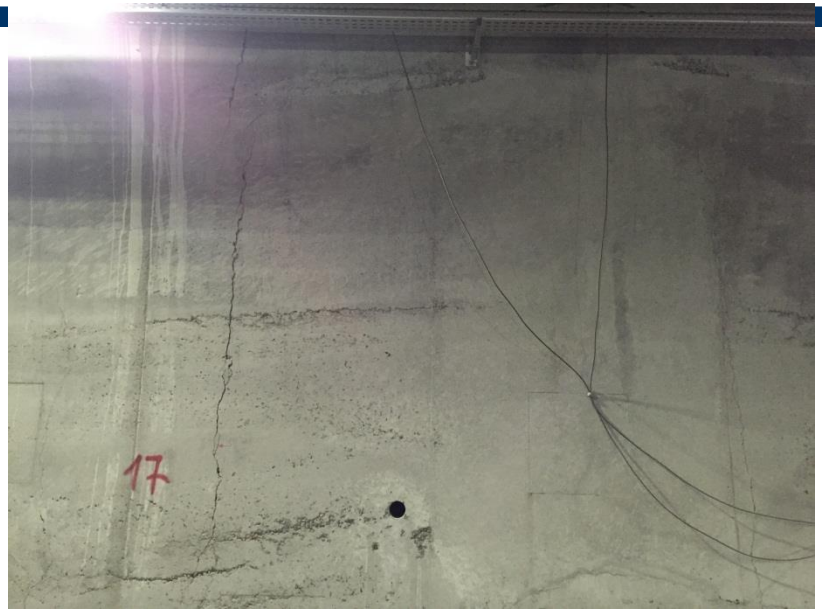

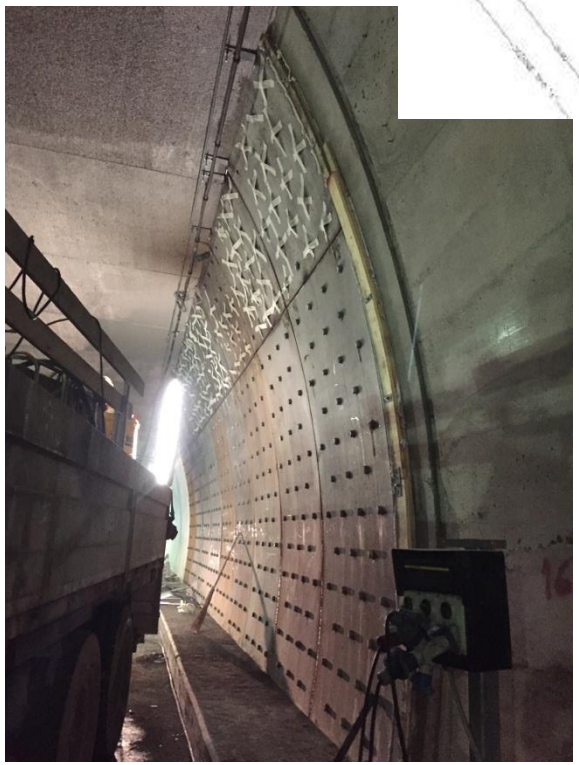

HIGH PERFORMANCE CONNECTION FOR STRUCTURAL REPAIR

Extensive cracking in a tunnel

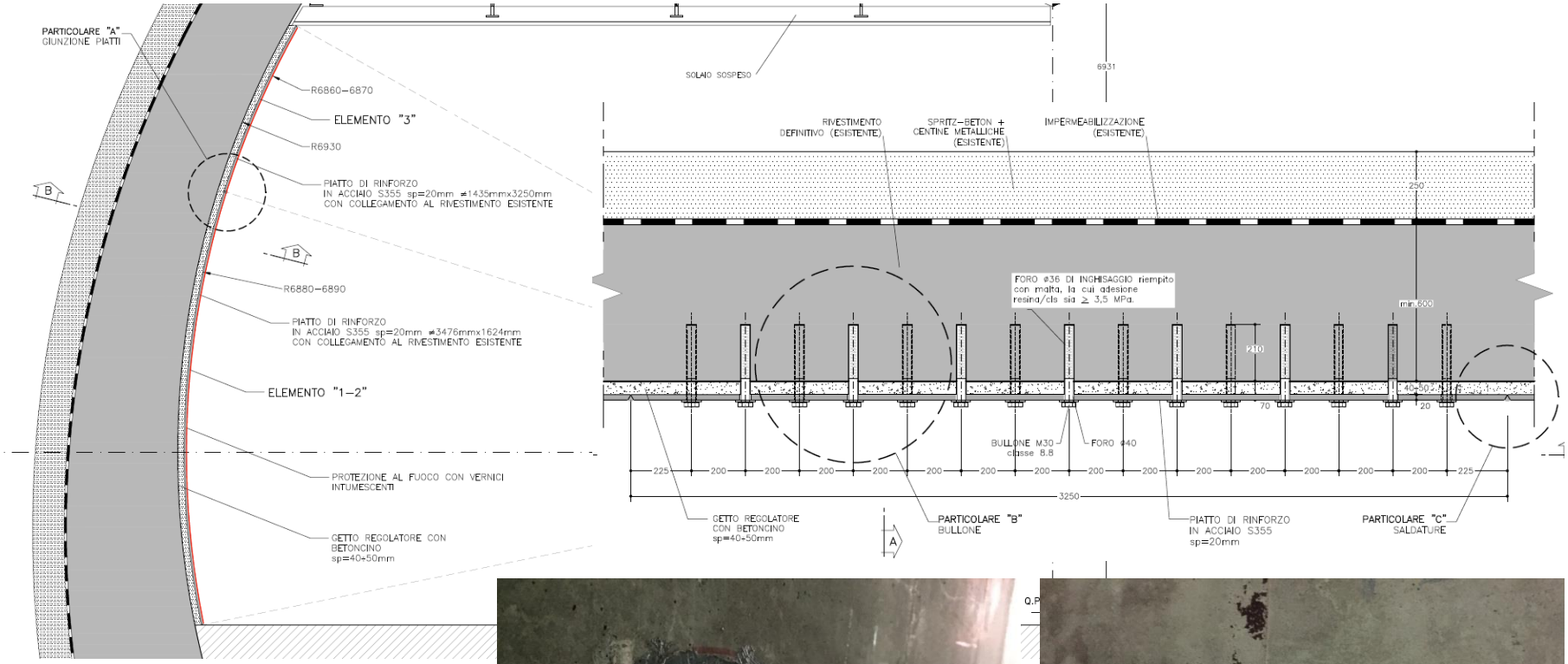

Load tests

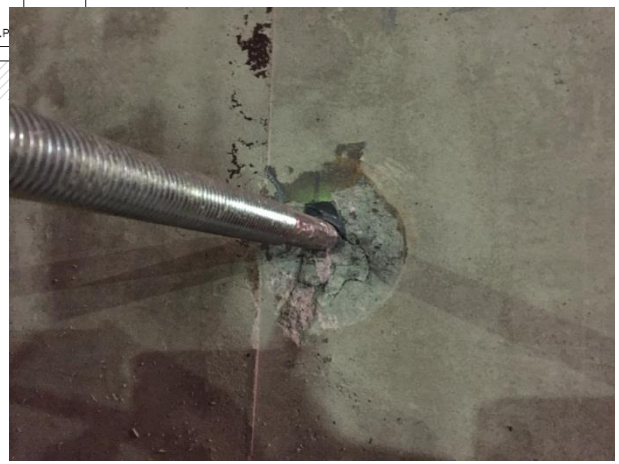

HIGH PERFORMANCE CONNECTION FOR STRUCTURAL REPAIR
Damage in a segmental precast p.c. bridge

HIGH PERFORMANCE CONNECTION FOR STRUCTURAL REPAIR

Damage in a segmental precast p.c. bridge

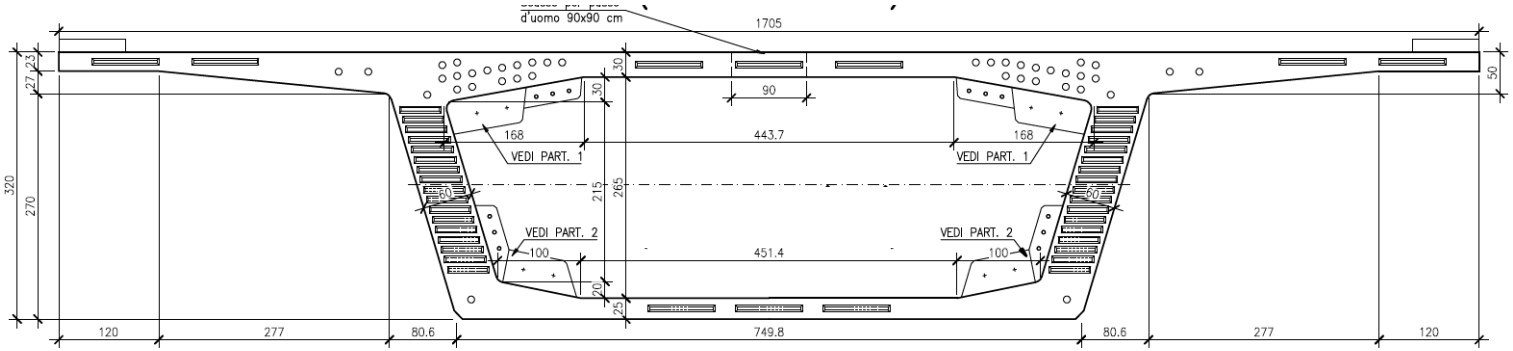

Depth: 3.20m

Depth: 5.40m

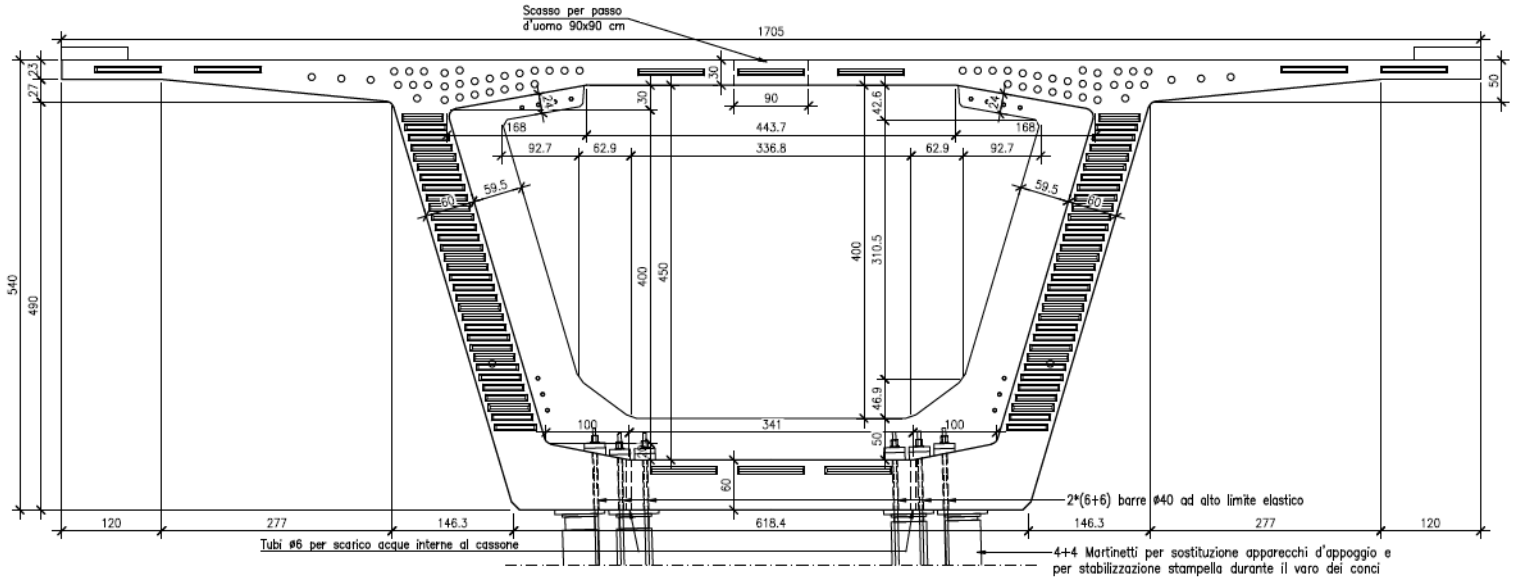

HIGH PERFORMANCE CONNECTION FOR STRUCTURAL REPAIR

Damage in a segmental precast p.c. bridge

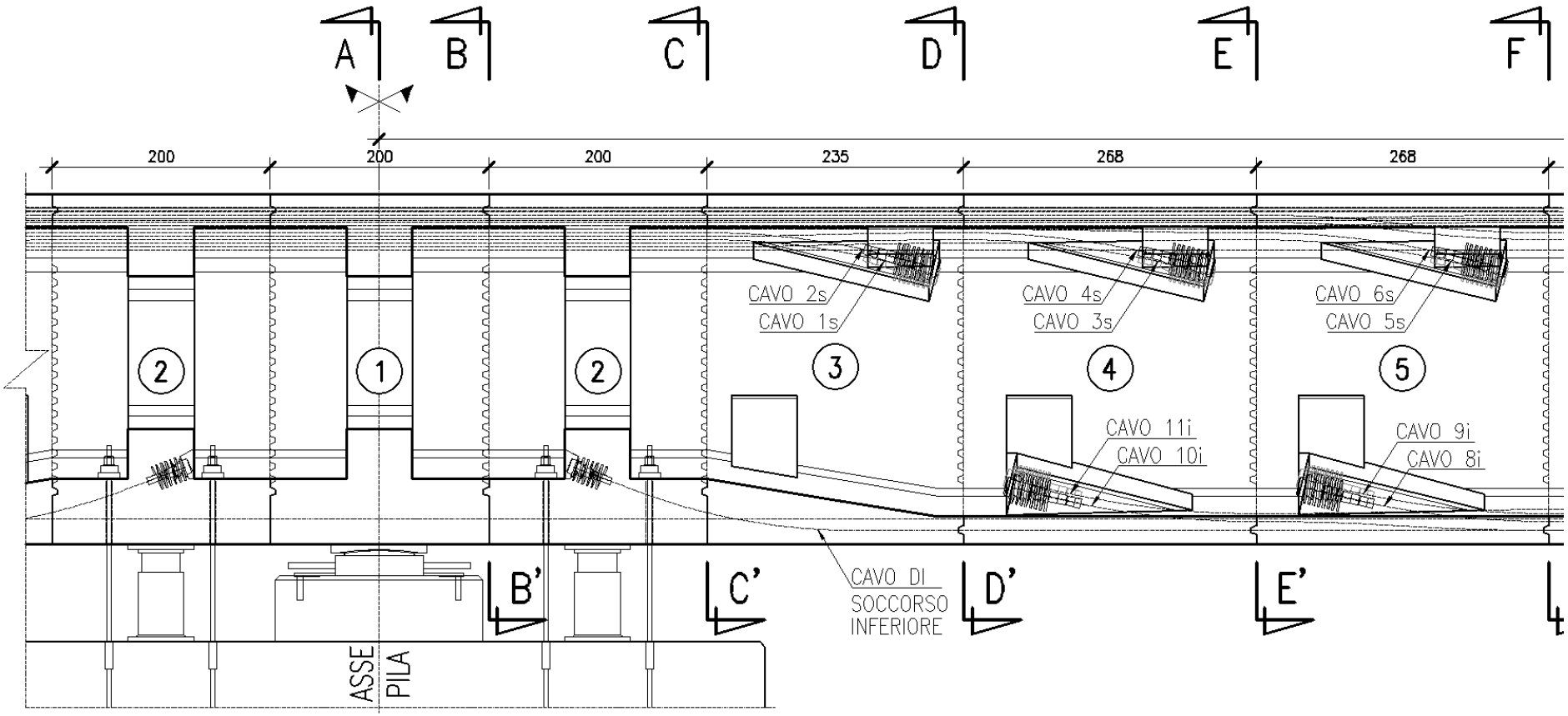

HIGH PERFORMANCE CONNECTION FOR STRUCTURAL REPAIR
Damage in a segmental precast p.c. bridge

Damage observed on the precast element during the tensioning phase

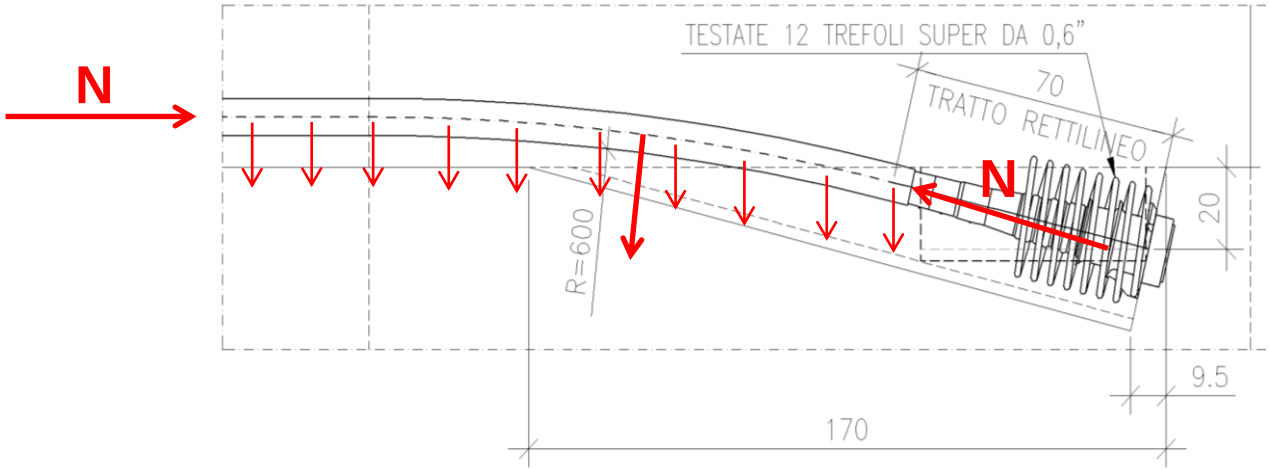

HIGH PERFORMANCE CONNECTION FOR STRUCTURAL REPAIR

Damage in a segmental precast p.c. bridge

Damage observed on the precast element during the tensioning phase

Transverse rebar in the original executive drawings, there are no stirrups but only open reinforcement

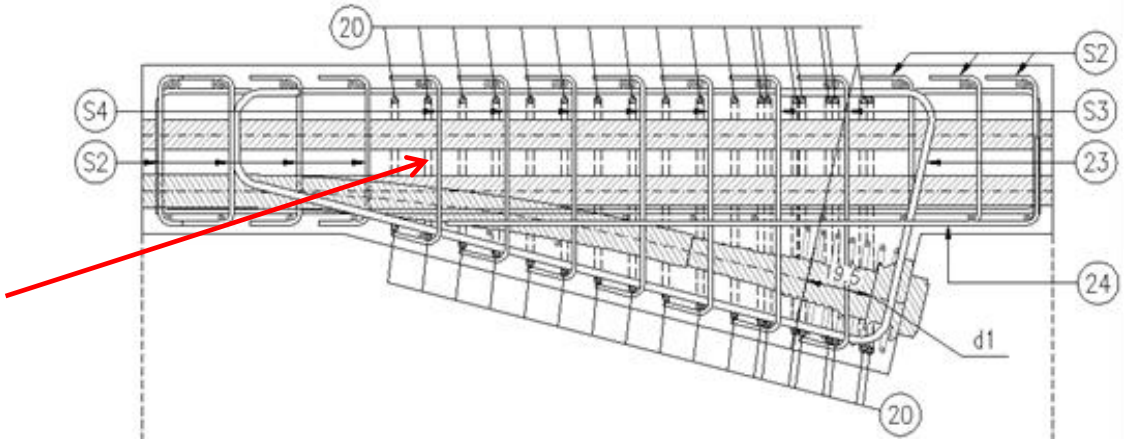

HIGH PERFORMANCE CONNECTION FOR STRUCTURAL REPAIR

Damage in a segmental precast p.c. bridge

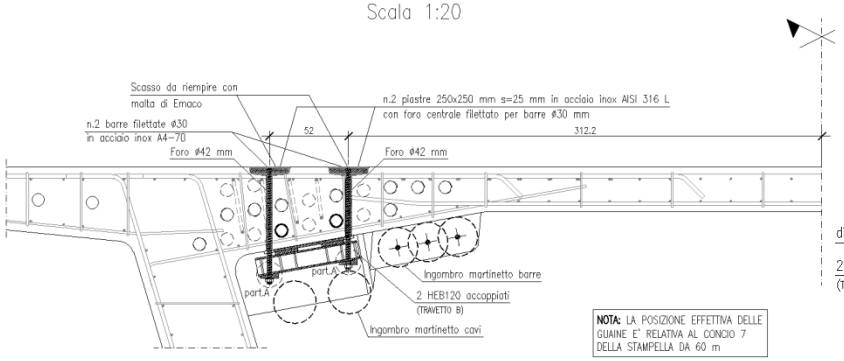

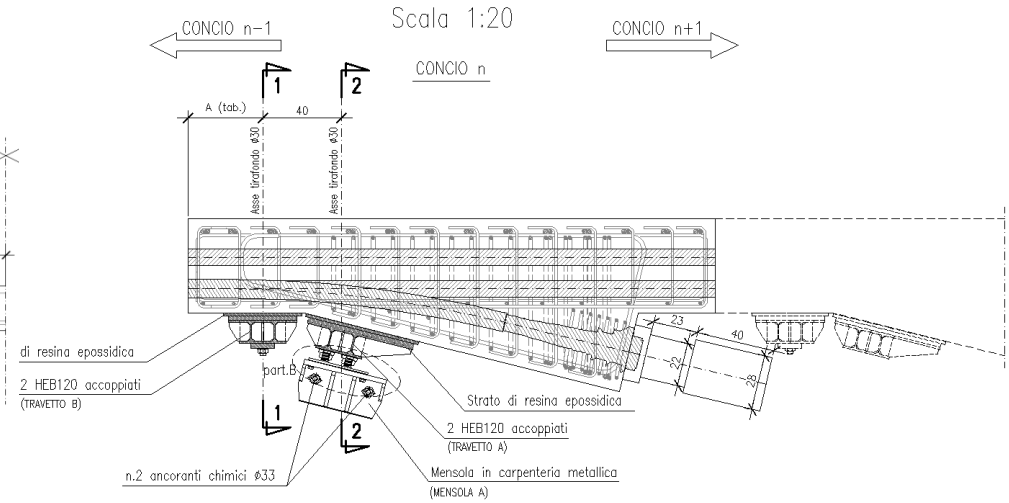

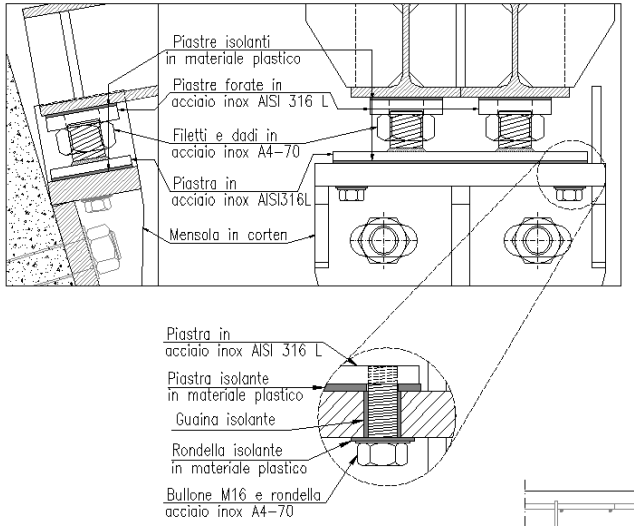

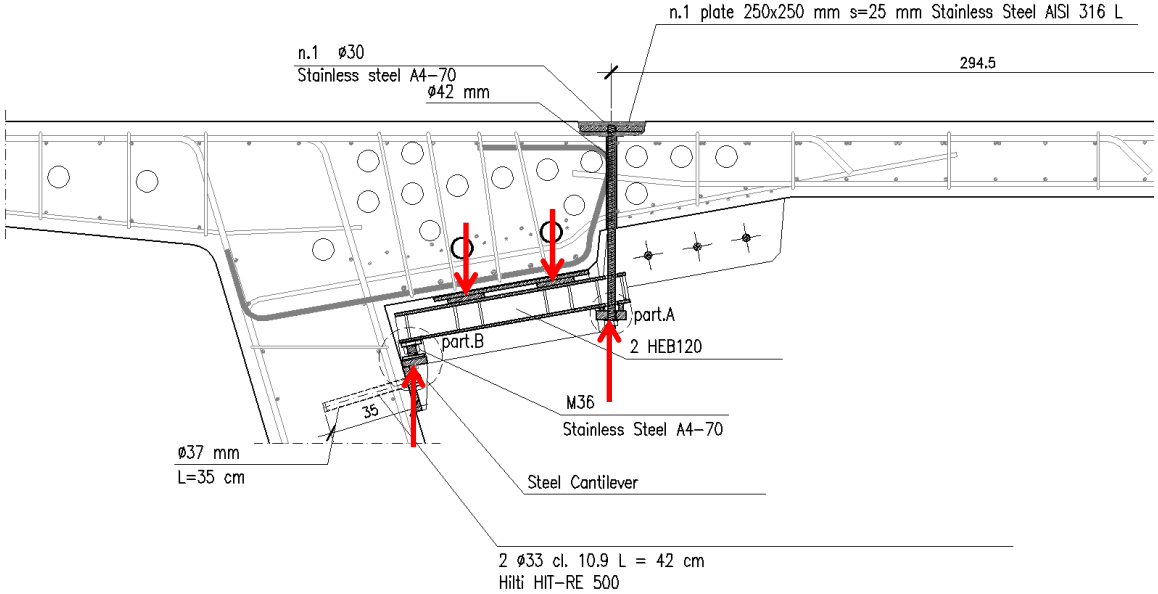

HIGH PERFORMANCE CONNECTION FOR STRUCTURAL REPAIR
Damage in a segmental precast p.c. bridge

Trasversal Section

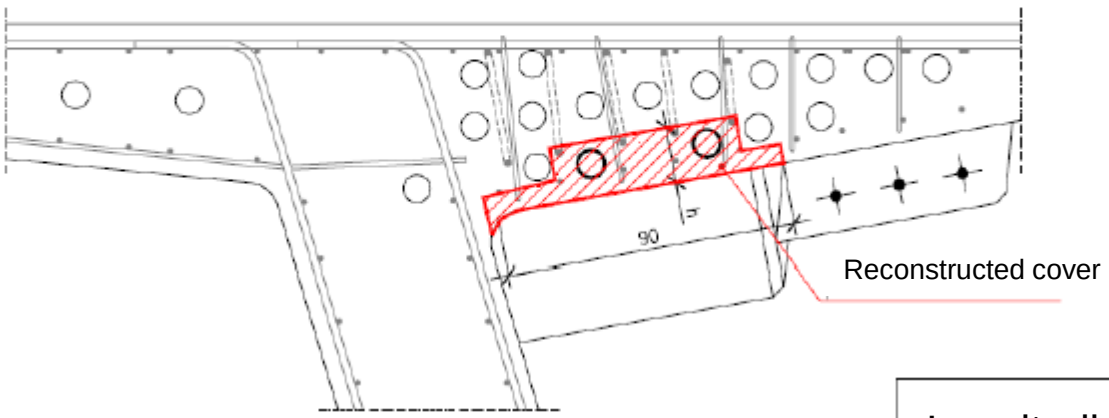

Longitudinal Section

Strenghtening devices: steel profiles welded to steel plates, prestressed by introducing imposed relative elastic displacements between them and rigid restraints

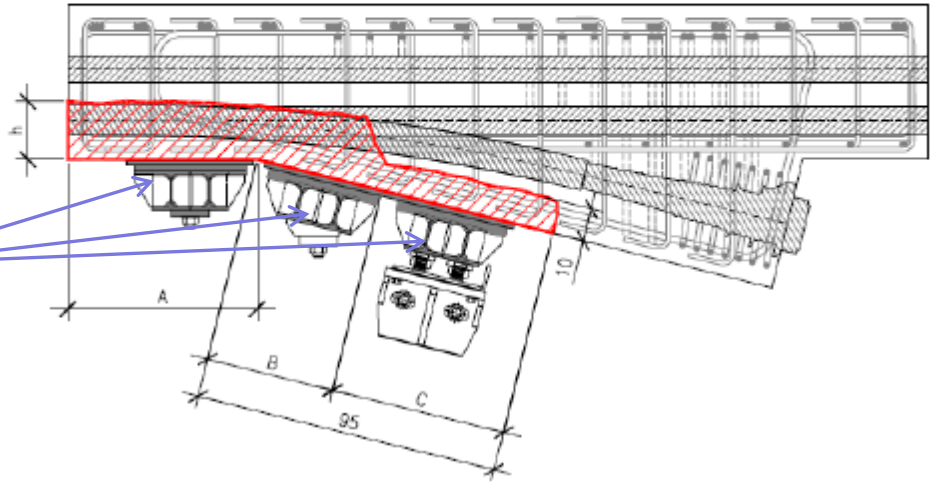

HIGH PERFORMANCE CONNECTION FOR STRUCTURAL REPAIR

Damage in a segmental precast p.c. bridge

HIGH PERFORMANCE CONNECTION FOR STRUCTURAL REPAIR

Damage in a segmental precast p.c. bridge

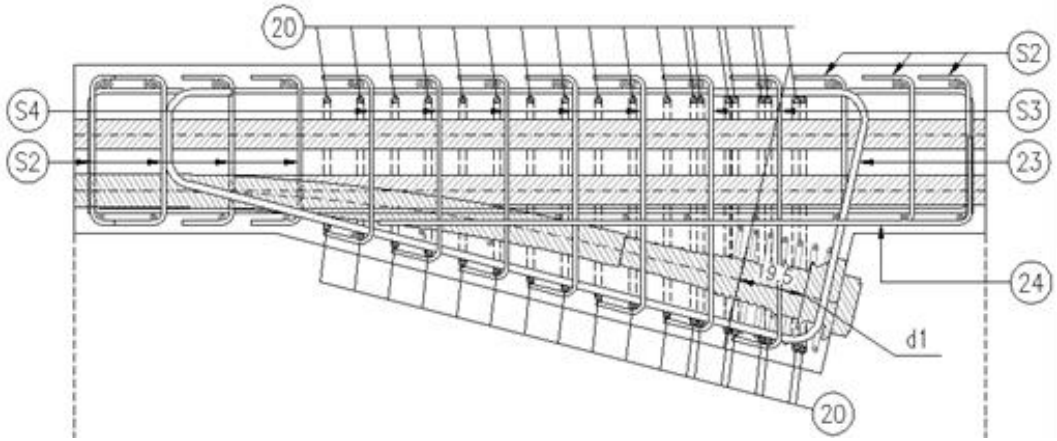

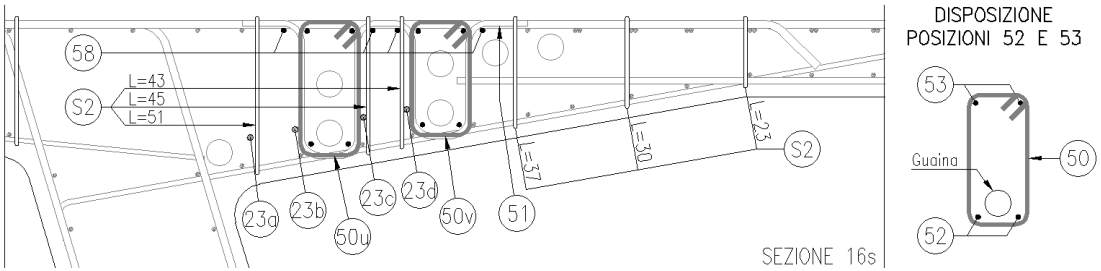

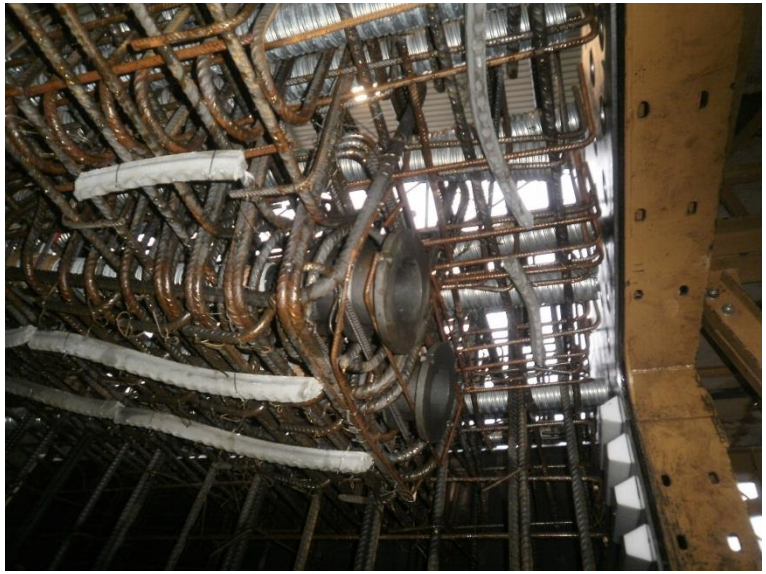

HIGH PERFORMANCE CONNECTION FOR STRUCTURAL REPAIR
Damage in a segmental precast p.c. bridge

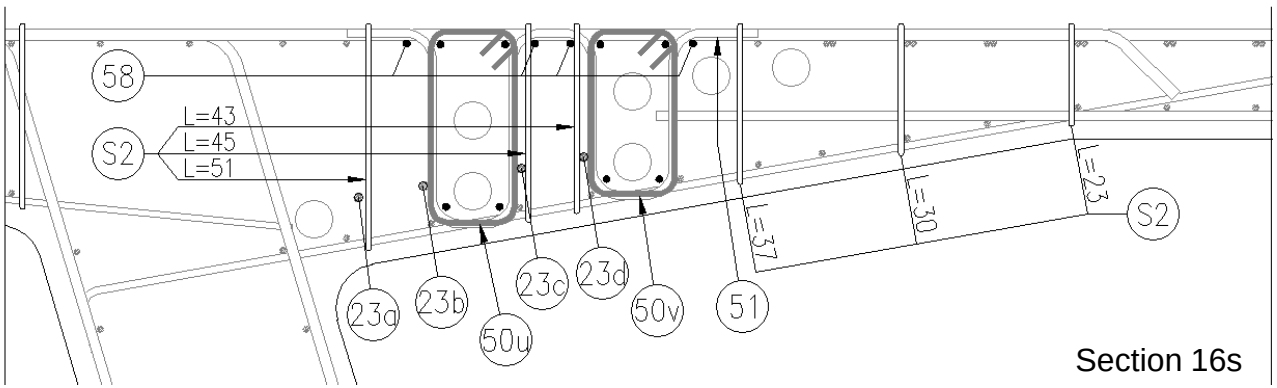

New closed stirrups

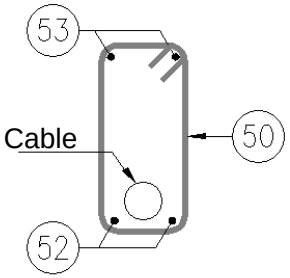

The equilibrium of the cables deviation forces has been guarateed with a more efficient distribution of stirrups with closed shape

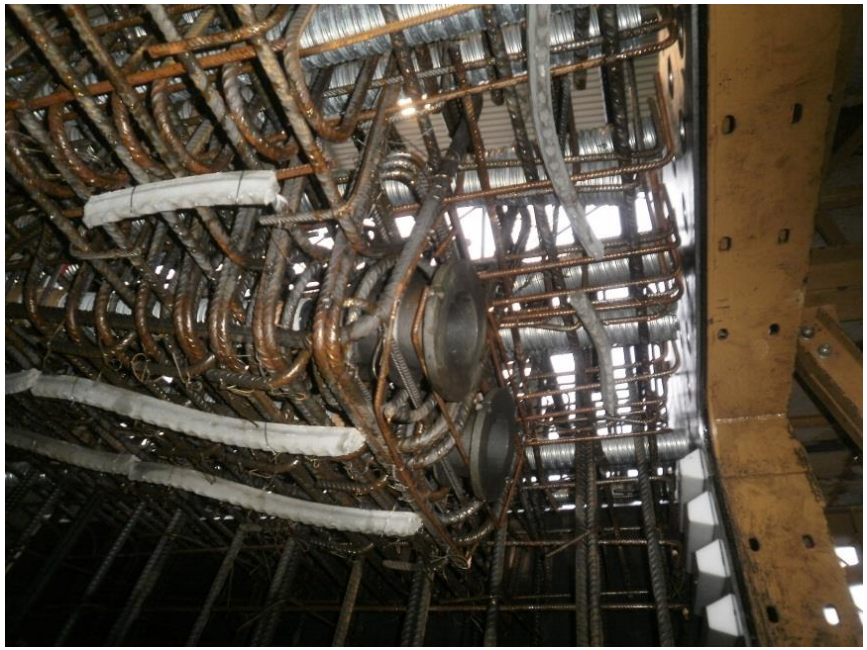

HIGH PERFORMANCE CONNECTION FOR STRUCTURAL REPAIR
Damage in a segmental precast p.c. bridge

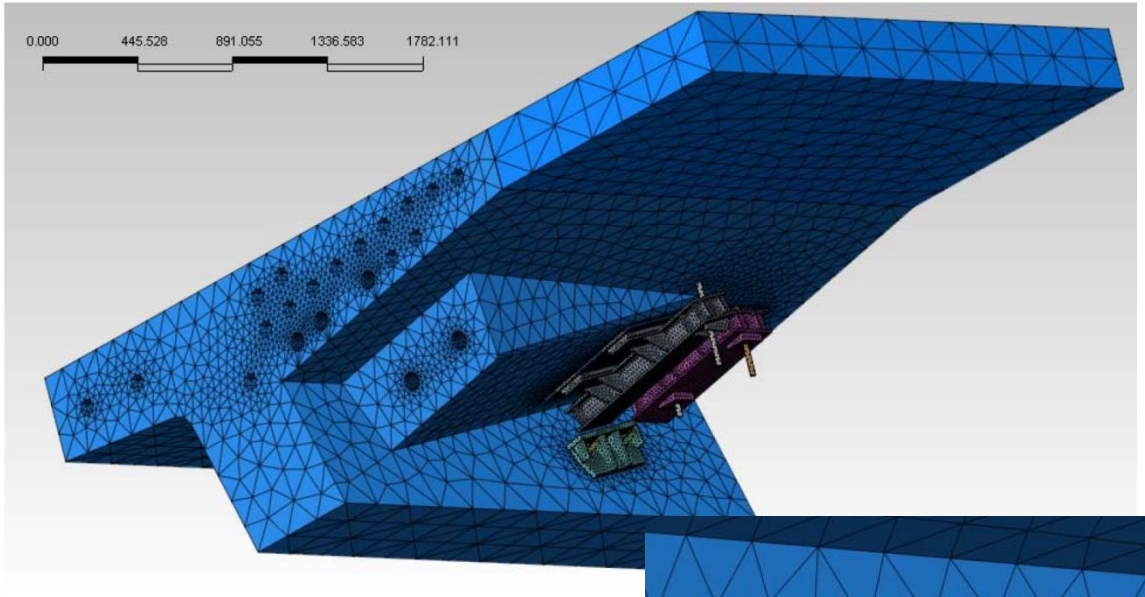

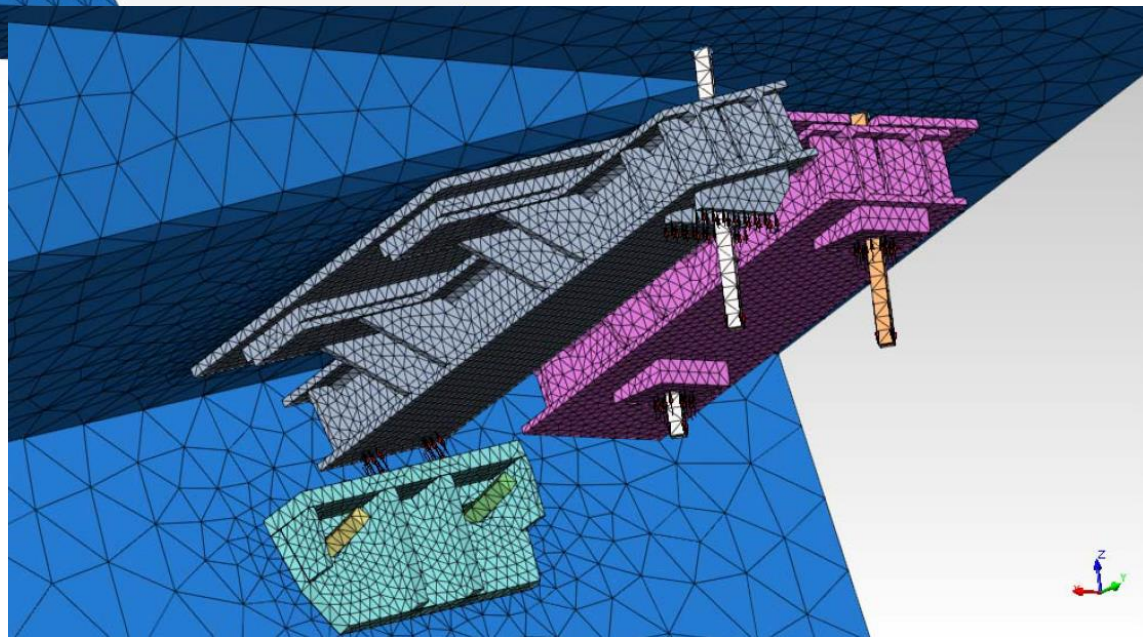

HIGH PERFORMANCE CONNECTION FOR STRUCTURAL REPAIR
Damage in a segmental precast p.c. bridge

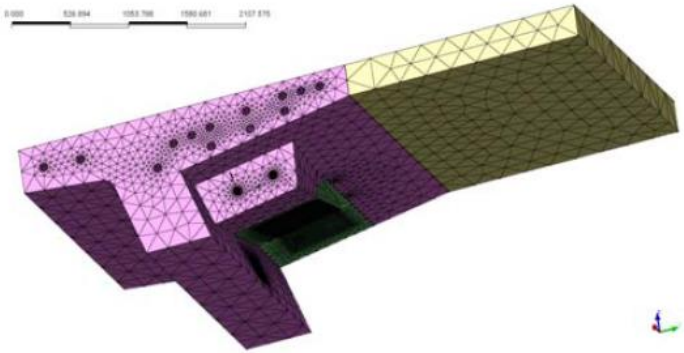

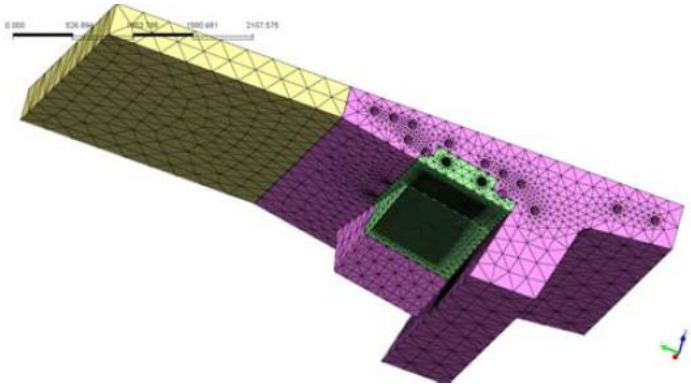

Cross section geometry

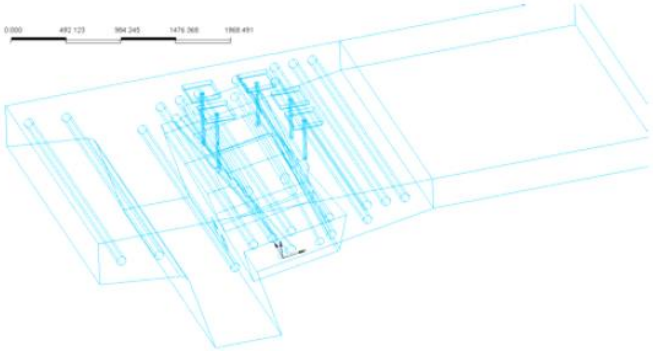

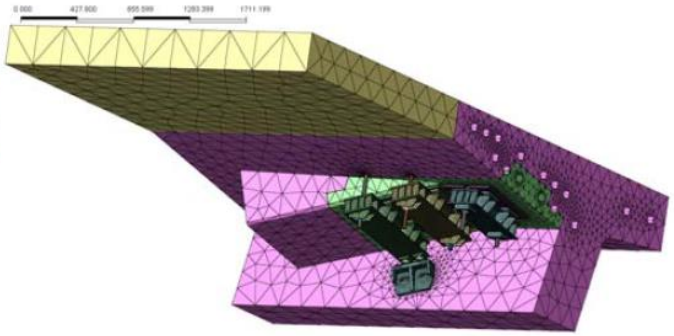

Prestressing reinforcement

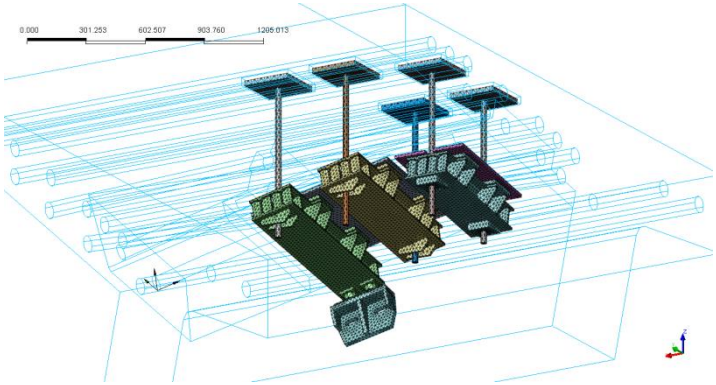

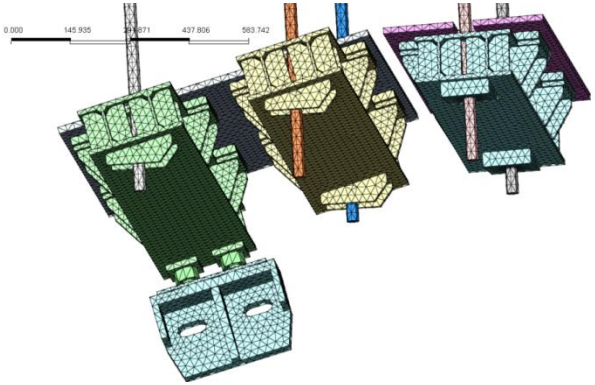

Details

HIGH PERFORMANCE CONNECTION FOR STRUCTURAL REPAIR

Damage in a segmental precast p.c. bridge

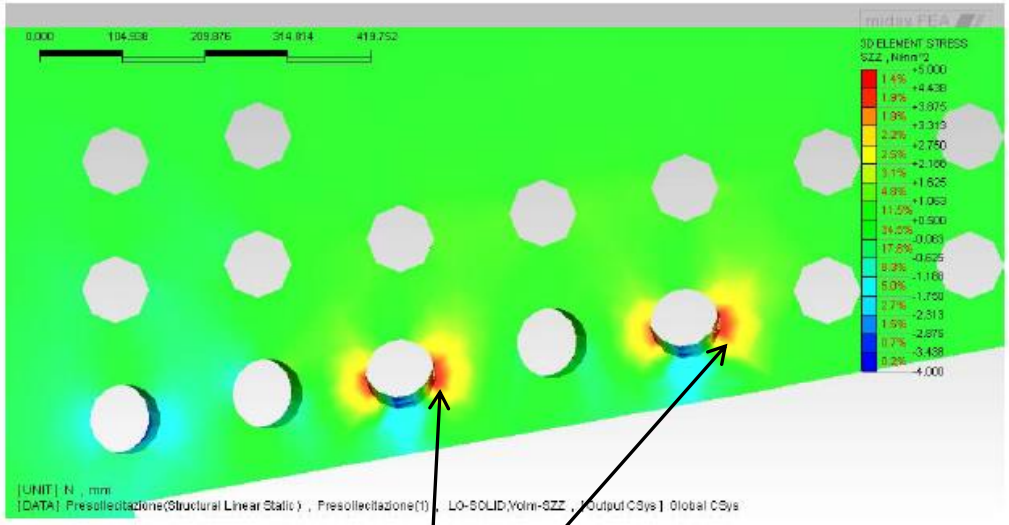

Principal stress of tension ≅ 6MPa

Vertical tension $\sigma_z \cong 5$MPa

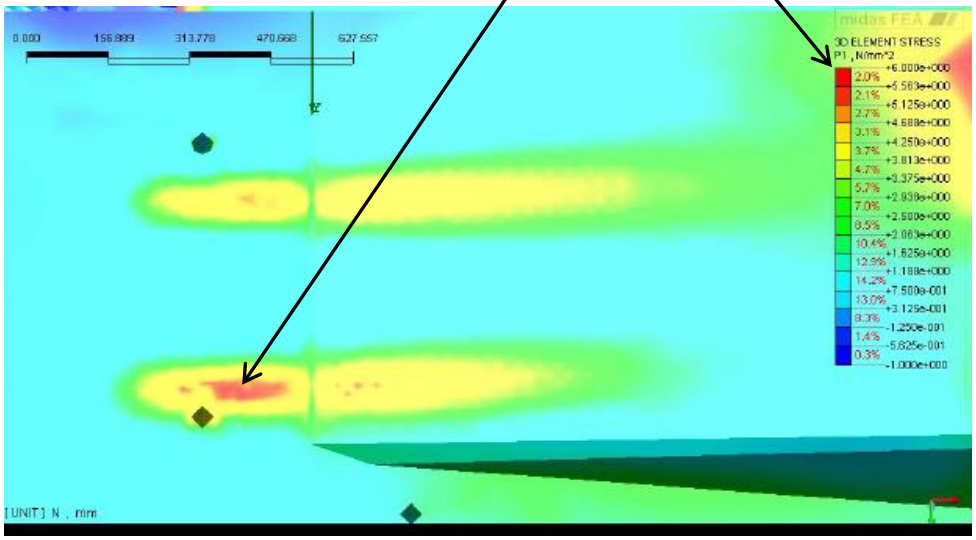

HIGH PERFORMANCE CONNECTION FOR STRUCTURAL REPAIR

Damage in a segmental precast p.c. bridge

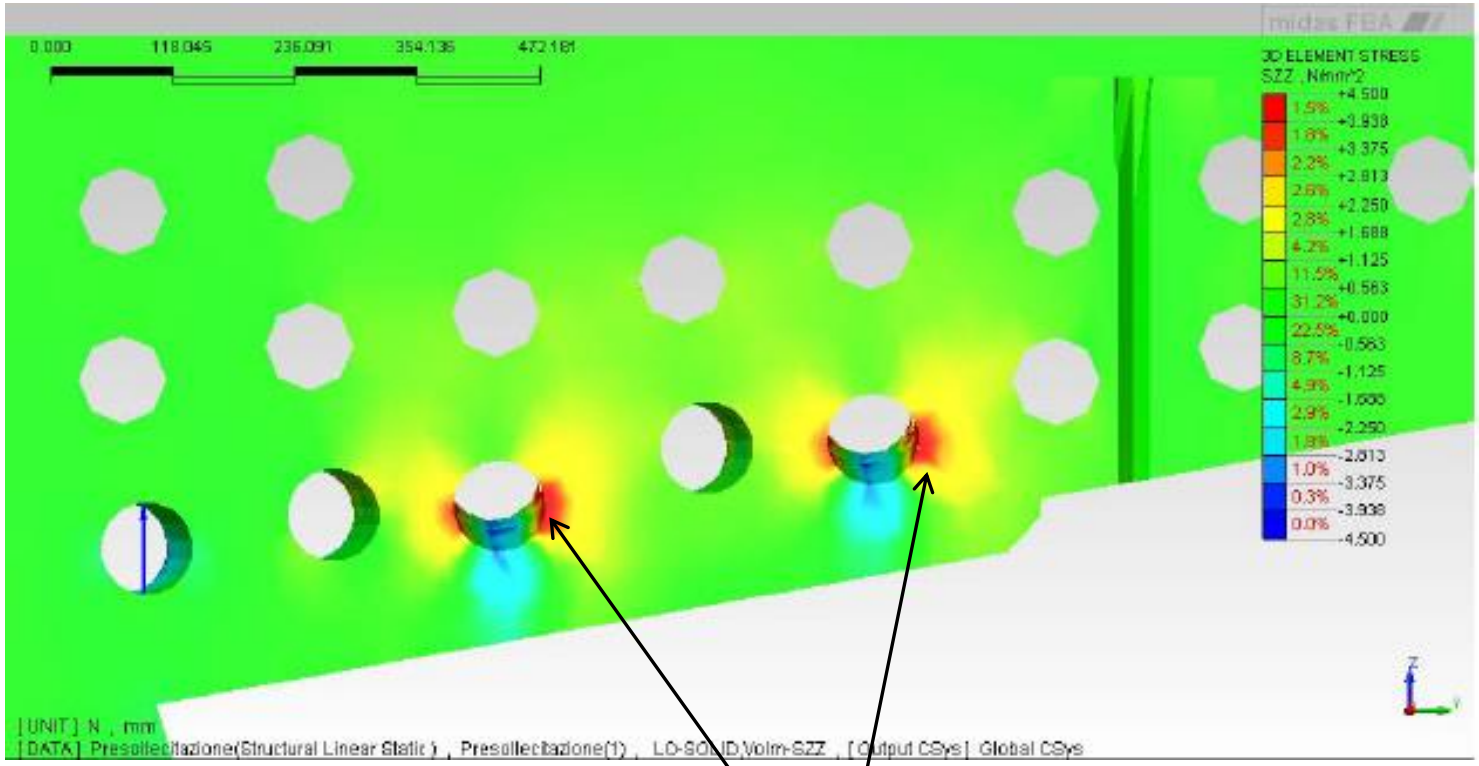

Vertical tension $\sigma_z \cong 4.5$MPa

HIGH PERFORMANCE CONNECTION FOR STRUCTURAL REPAIR

Damage in a segmental precast p.c. bridge

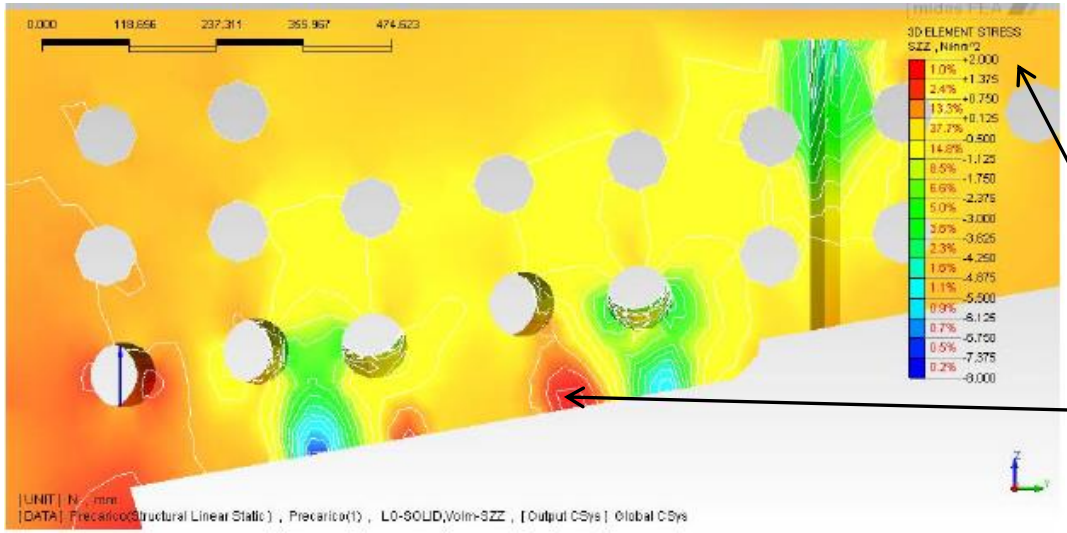

Introduction of a prestressing force about 50% of the total deviation force of the cable

Vertical tension σ_z < 2MPa

Principal stress of tension:
- Zone A and B: local effect due to linear elastic model

- Zone C: tension due to prestressing less tha 2 MPa

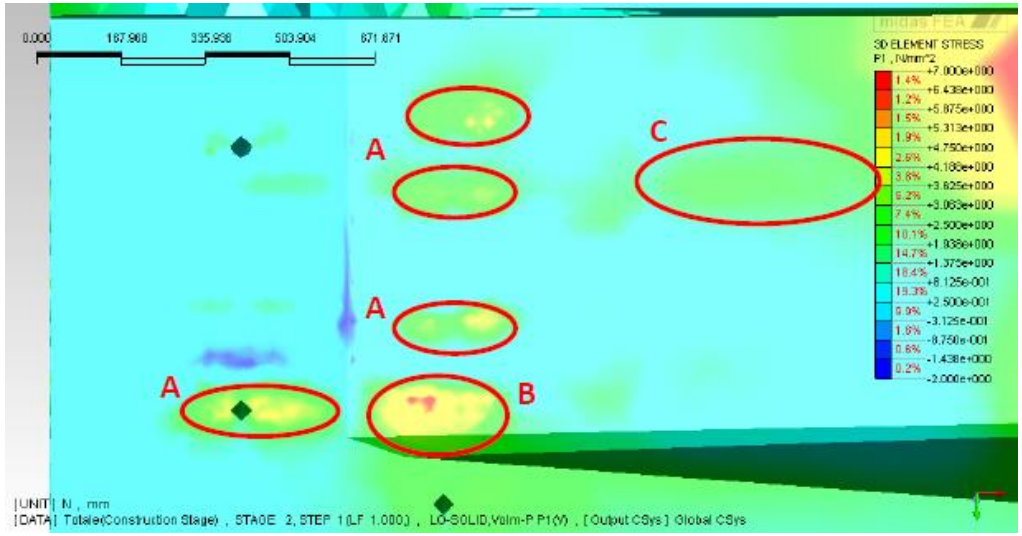

HIGH PERFORMANCE CONNECTION FOR STRUCTURAL REPAIR
Damage in a segmental precast p.c. bridge

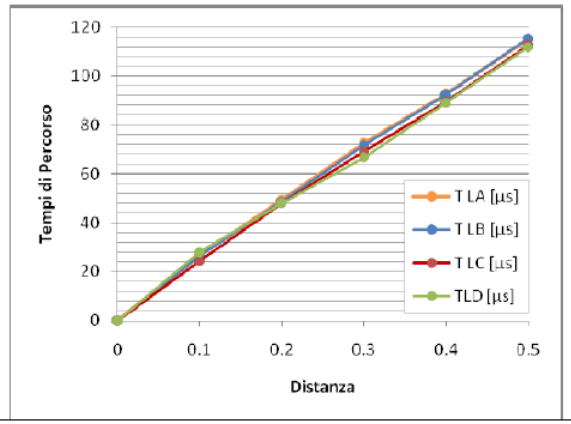

Ultrasonic tests performed before prestressing the cables

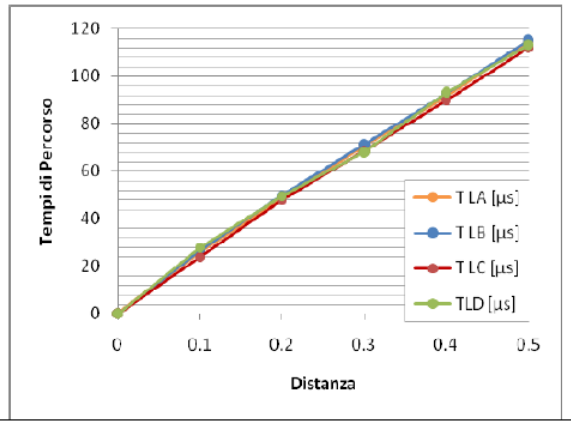

Ultrasonic tests performed after prestressing the cables

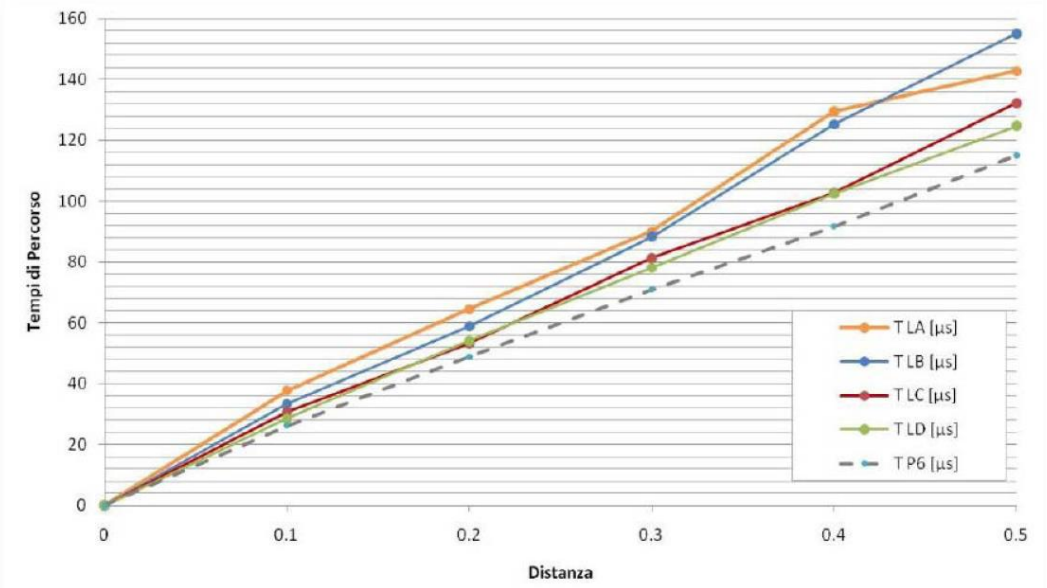

HIGH PERFORMANCE CONNECTION FOR STRUCTURAL REPAIR

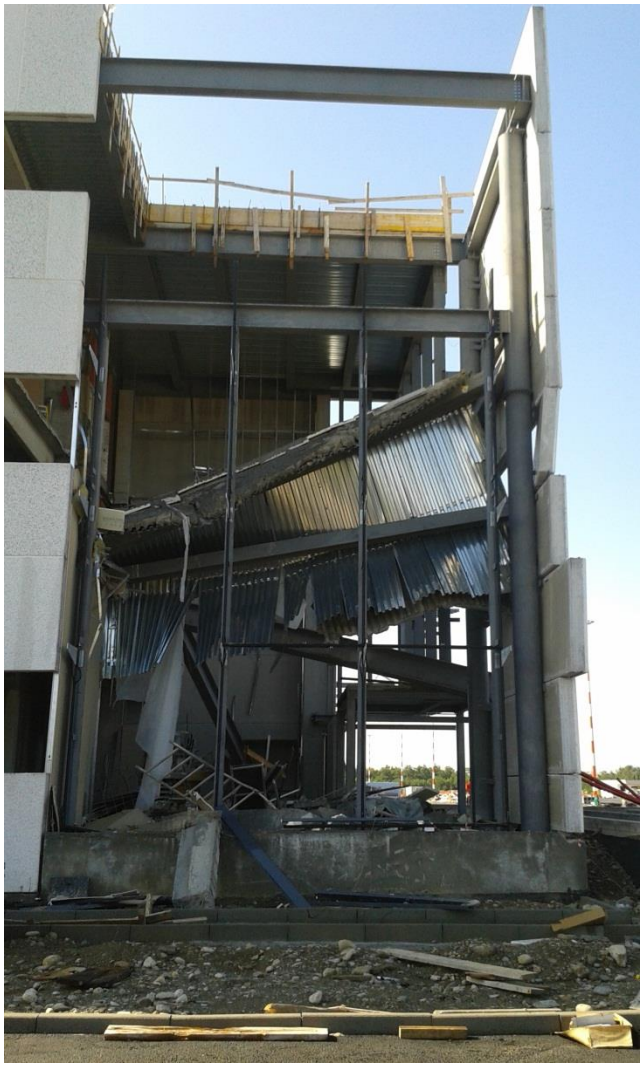

HIGH PERFORMANCE CONNECTION FOR STRUCTURAL REPAIR

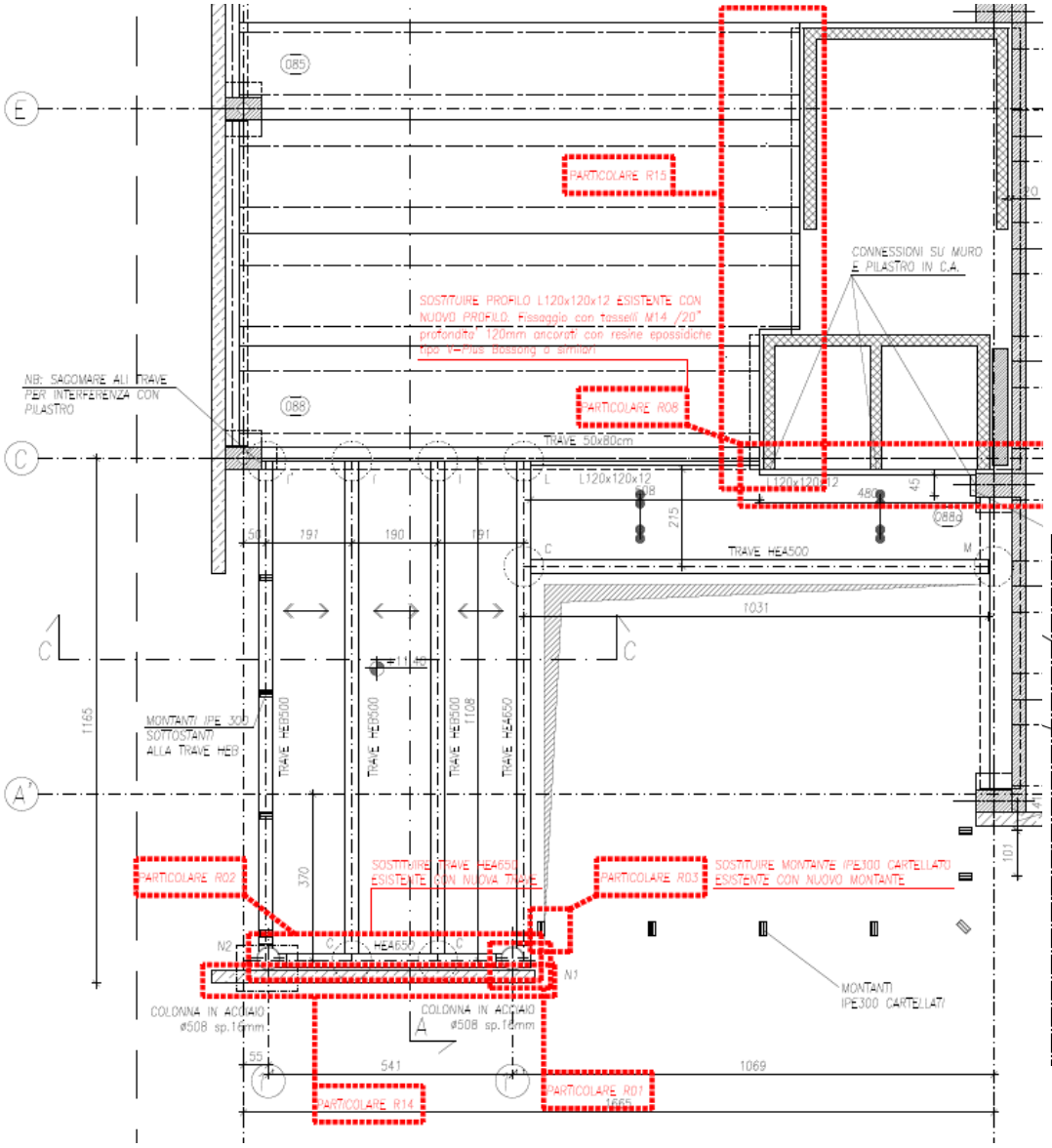

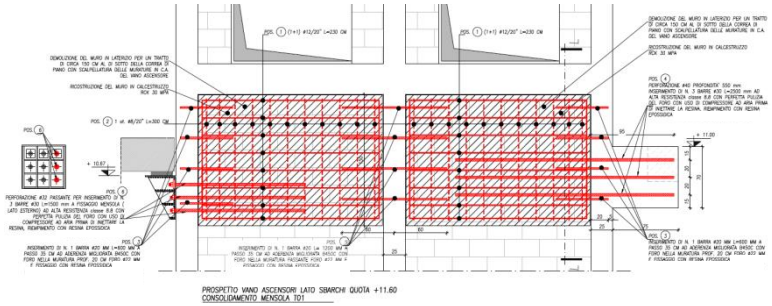

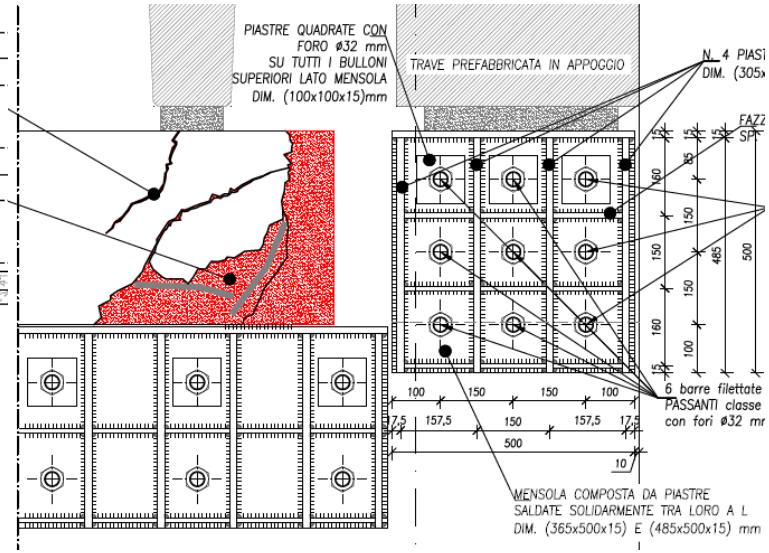

HIGH PERFORMANCE CONNECTION FOR STRUCTURAL REPAIR

HIGH PERFORMANCE CONNECTION FOR STRUCTURAL REPAIR

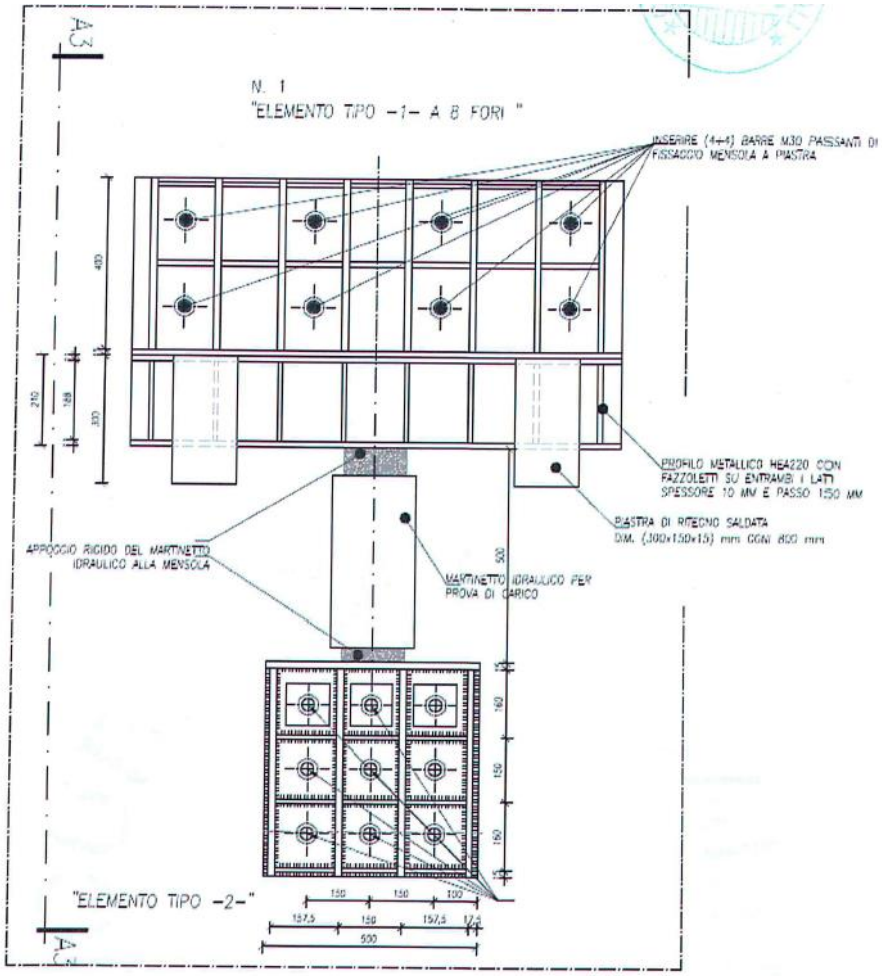

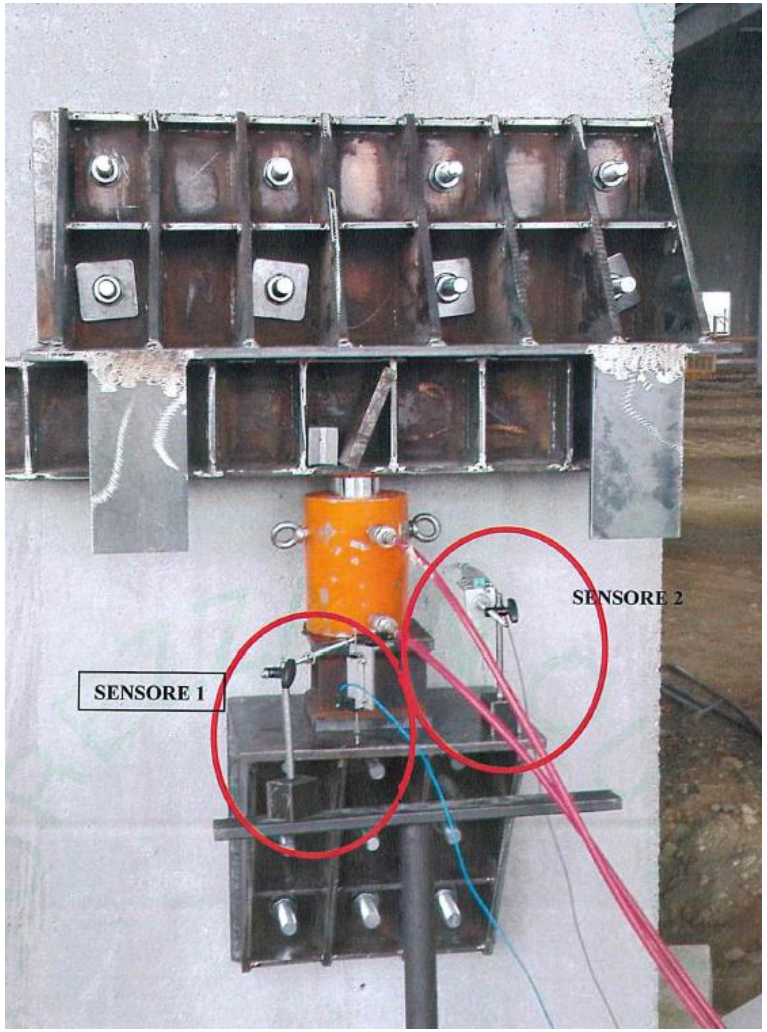

NEWLY DESIGN STRUCTURES
Connections

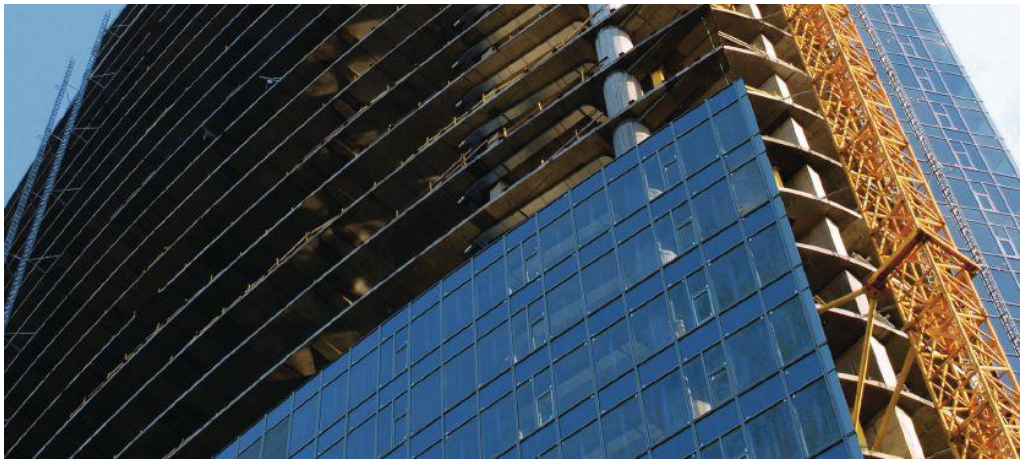

Ceppo lombardo panels

- Façade panels
- “Bottom” panels
- “Edge” panels

NEWLY DESIGNED STRUCTURES
Connection of non-structural elements

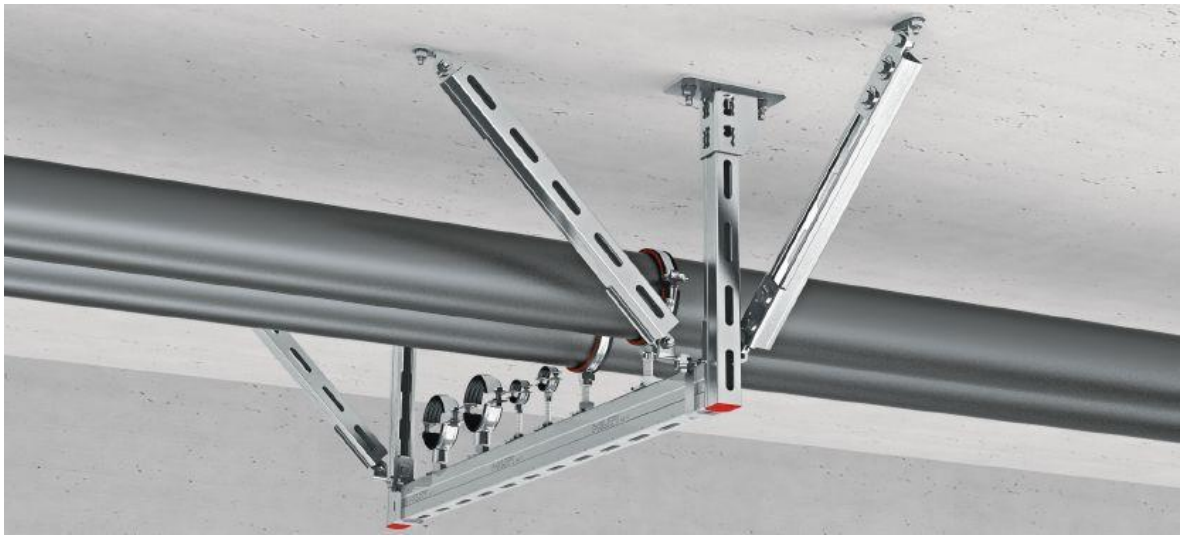

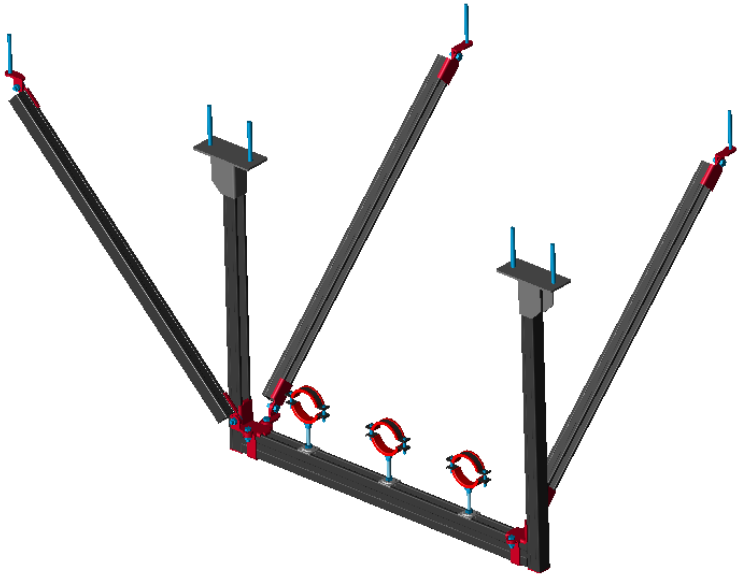

NEWLY DESIGNED STRUCTURES
Connection of non-structural elements

NEWLY DESIGNED STRUCTURES
Connections between structural elements

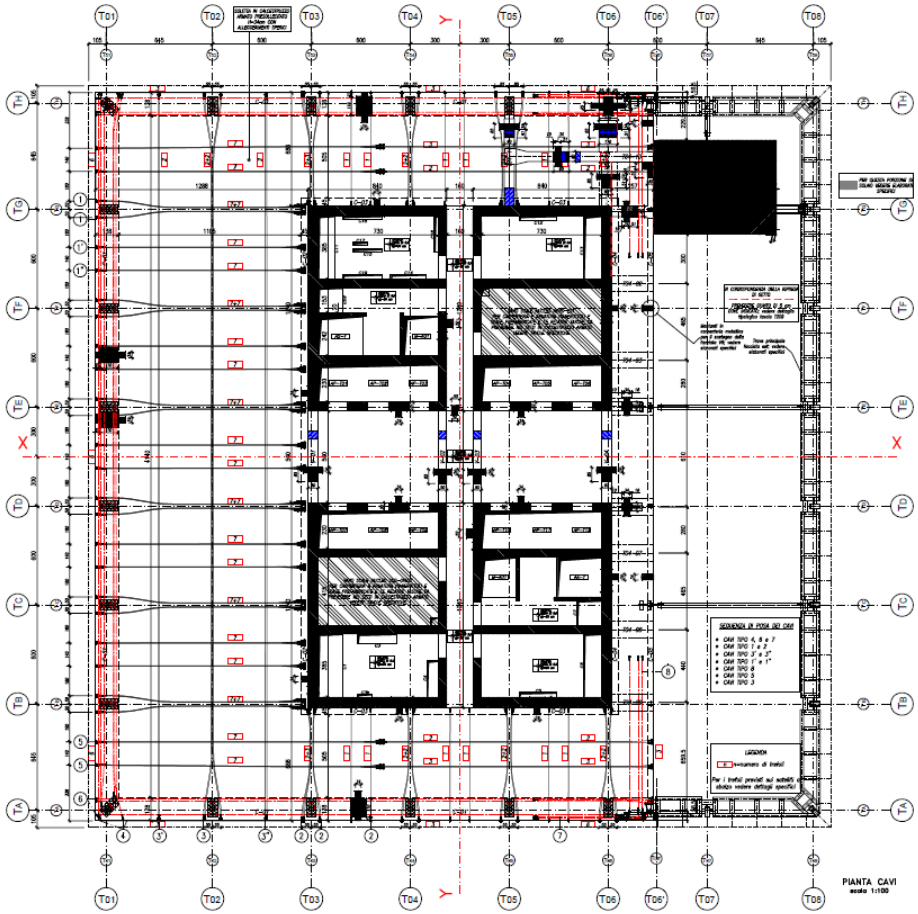

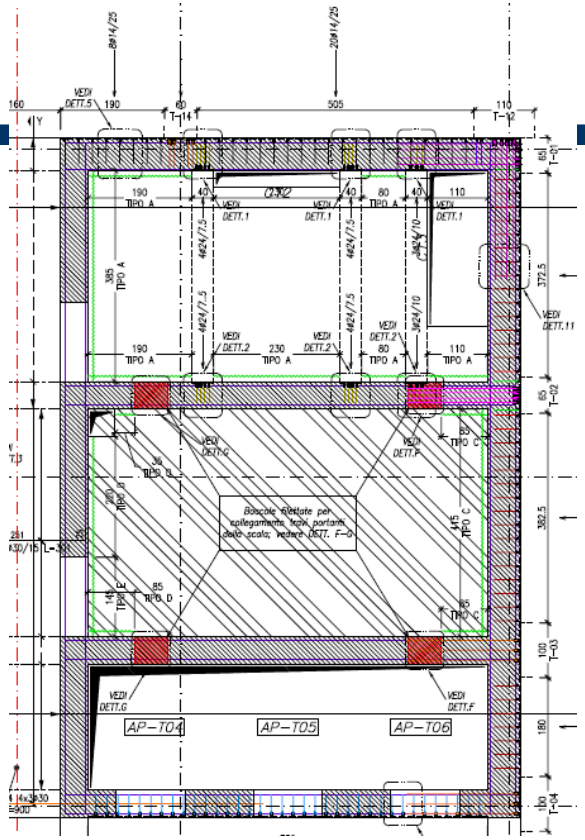

NEWLY DESIGNED STRUCTURES
Connections between structural elements

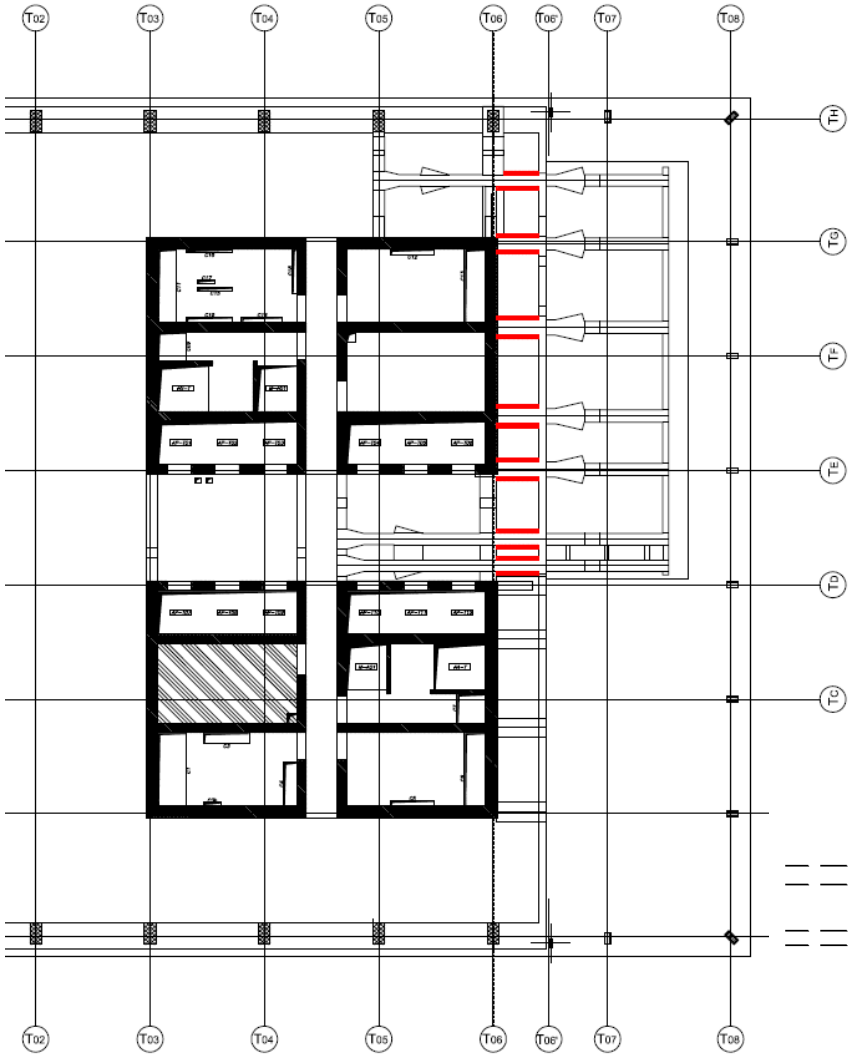

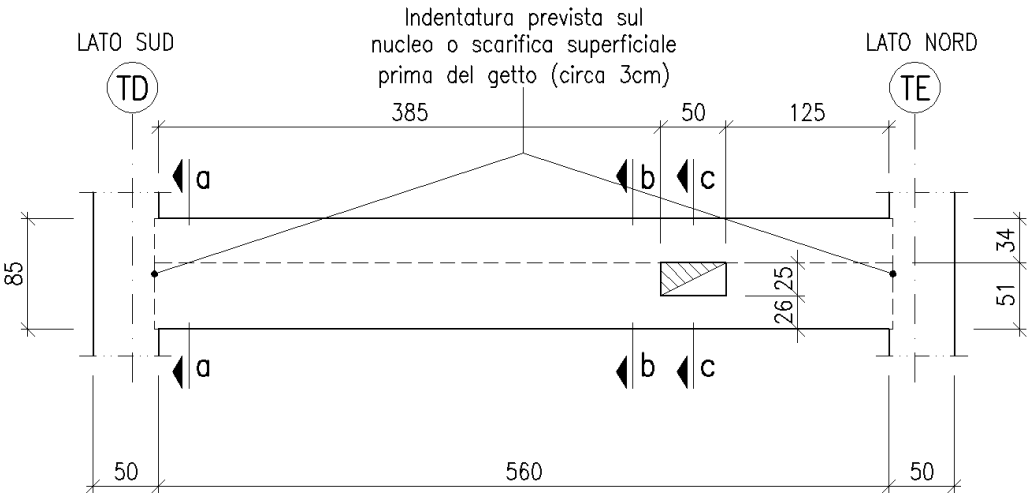

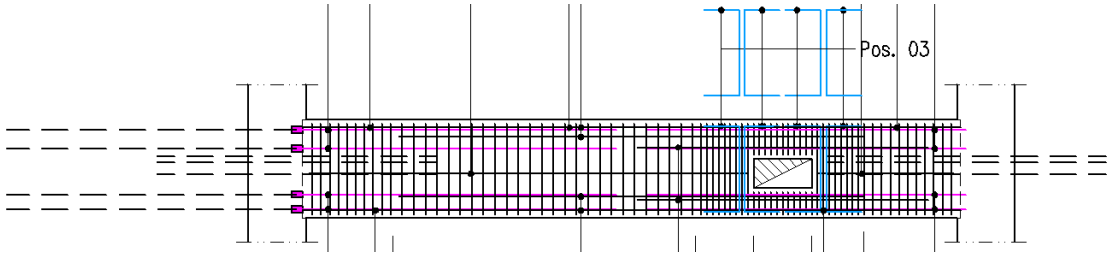

Torre Regione Piemonte

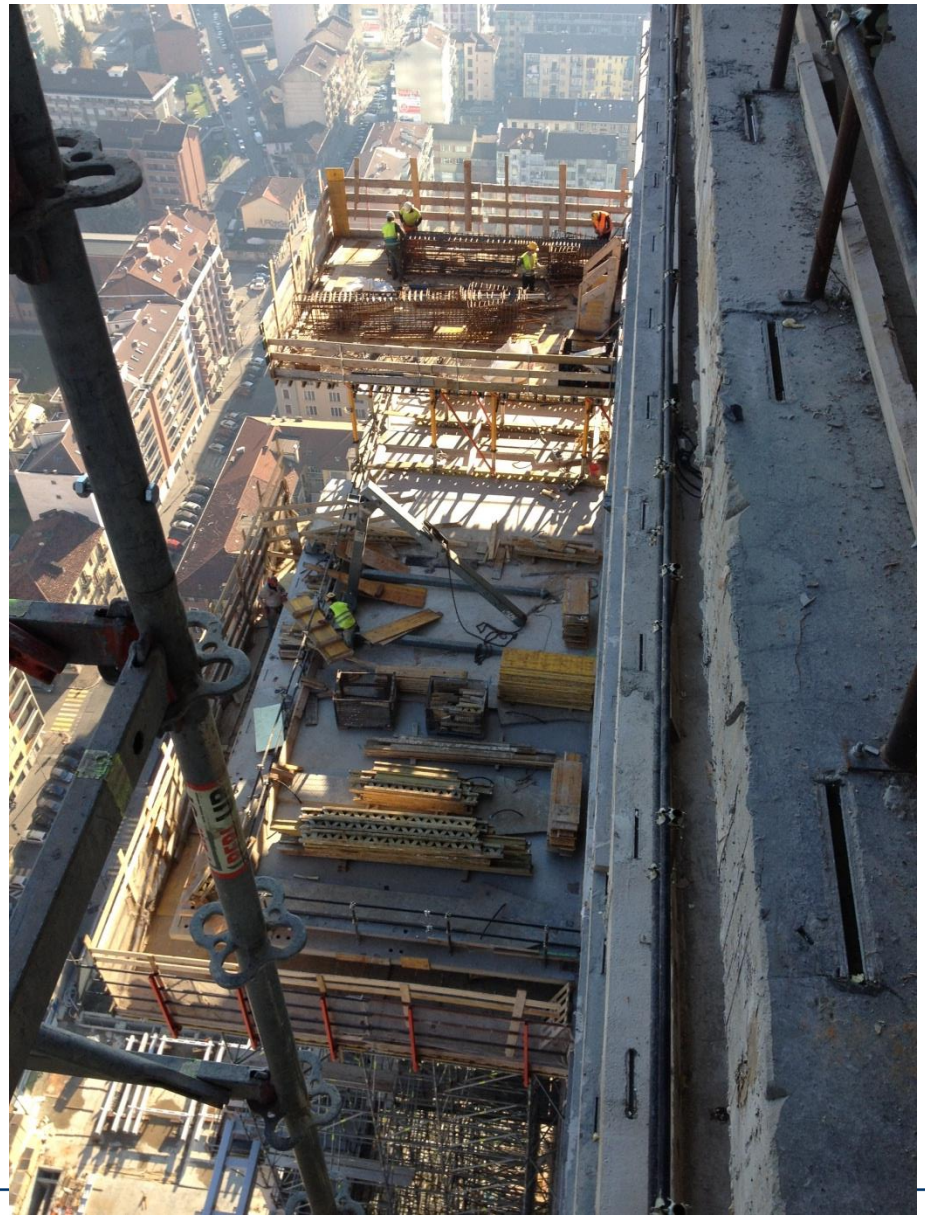

Torre Regione Piemonte

Sliding supports

Sliding support to connect the steel facade to the prestressed concrete decks

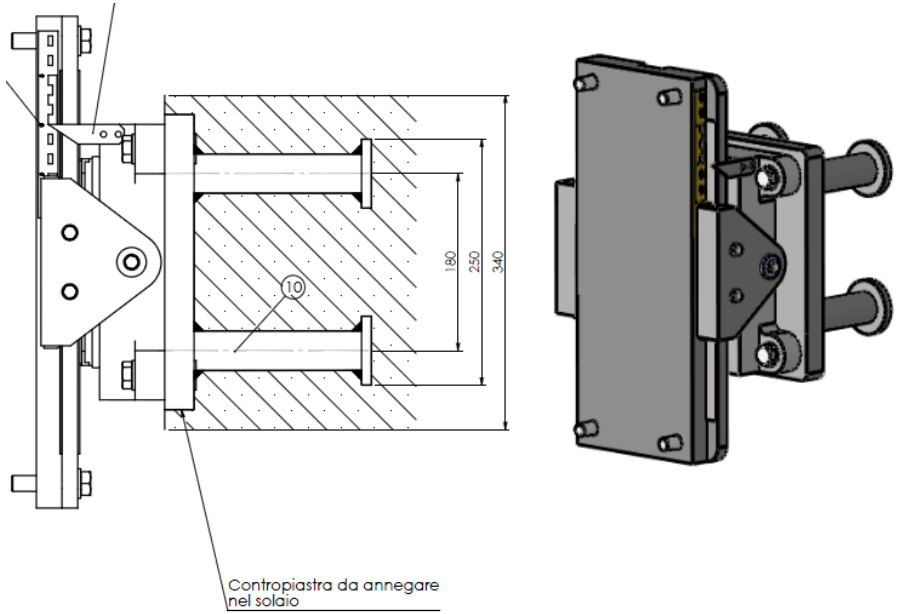

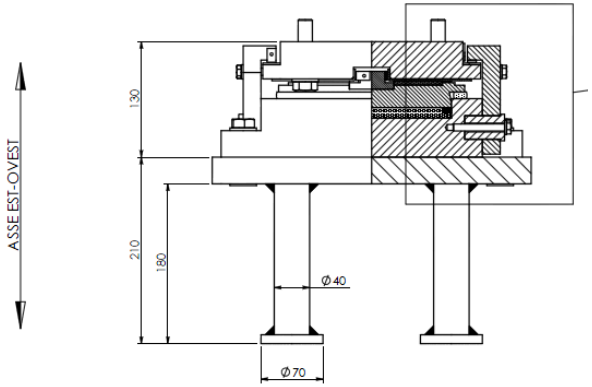

SPECIAL STRUCTURES

SPECIAL STRUCTURES

SPINATURE TRA PALI E TRAVE AD ANELLO INFERIORE SETTORE EST
scala 1:100

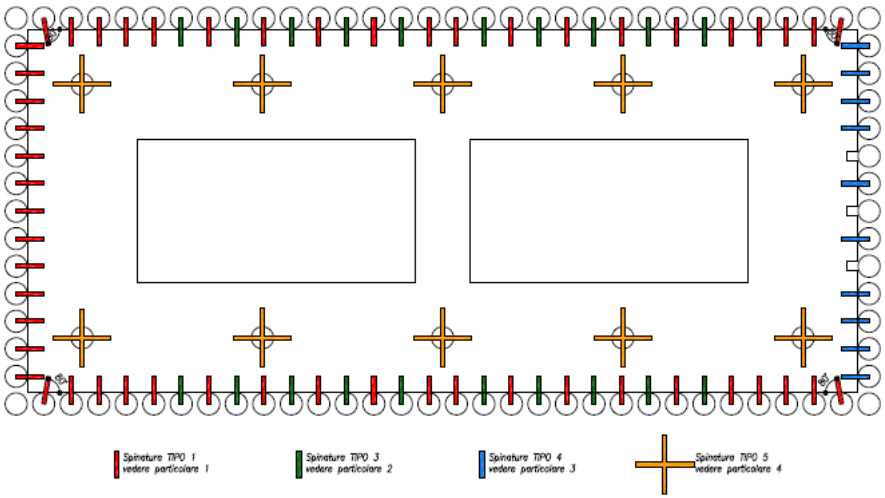

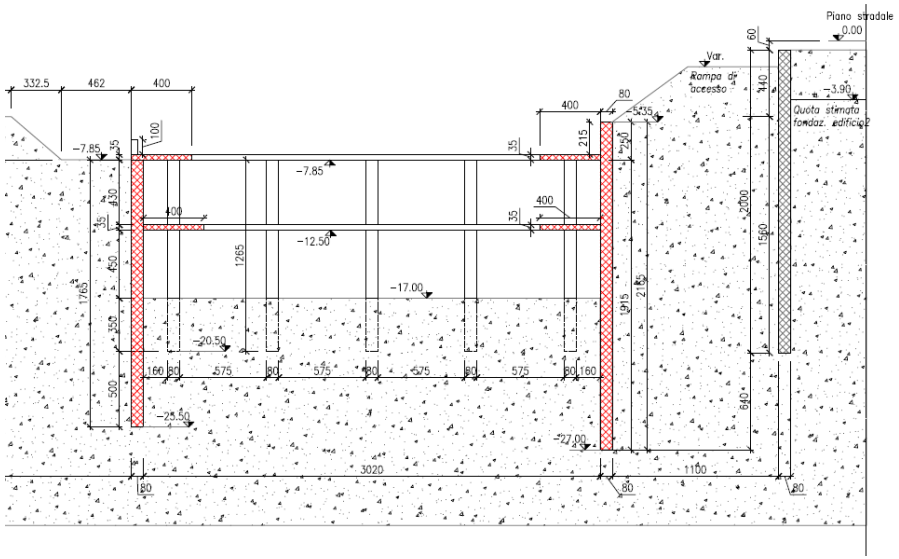

PARTICOLARE 1
REALIZZAZIONE SPINATURE DI TIPO 1
FRA PALI E TRAVI AD ANELLO
scala 1:20

FASE 1
REALIZZAZIONE FORI NEL PALO
VISTA FRONTALE E SEZIONE LATERALE

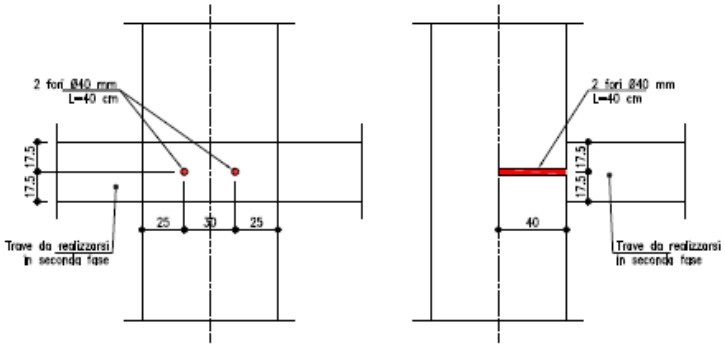

FASE 2
INSERIMENTO DELLE BARRE NEL PALO
SEZIONI FRONTALE E LATERALE

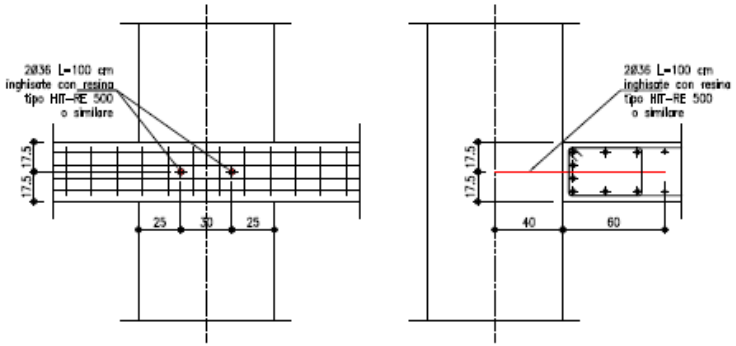

EXTRA HIGH LOAD TRANSMISSION
Allianz Tower - CityLife: top belt trusses

EXTRA HIGH LOAD TRANSMISSION
Allianz Tower - CityLife: top belt trusses

EXTRA HIGH LOAD TRANSMISSION
Allianz Tower - CityLife: top belt trusses

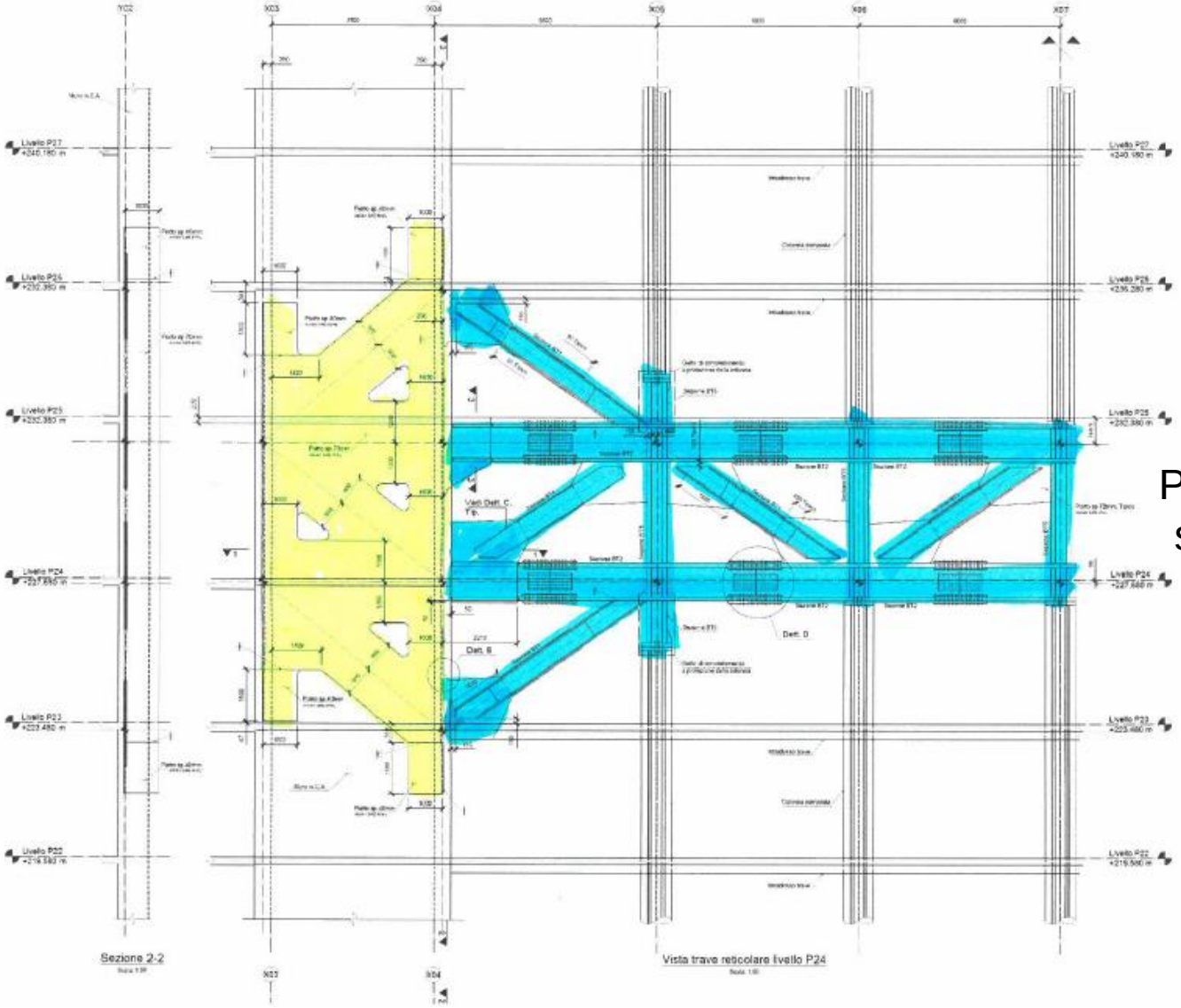

Proposed connection system (preliminary design)

EXTRA HIGH LOAD TRANSMISSION
Allianz Tower - CityLife: top belt trusses

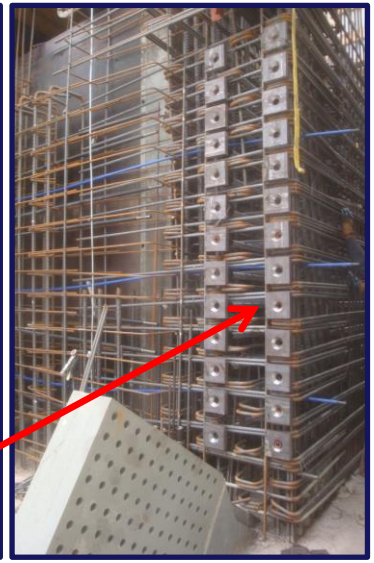

Dywidag bars D=47mm (friction connection P24-P25)

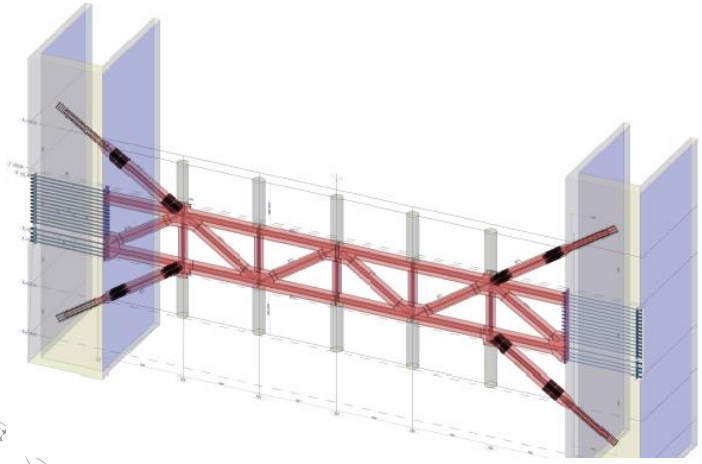

P22-P23

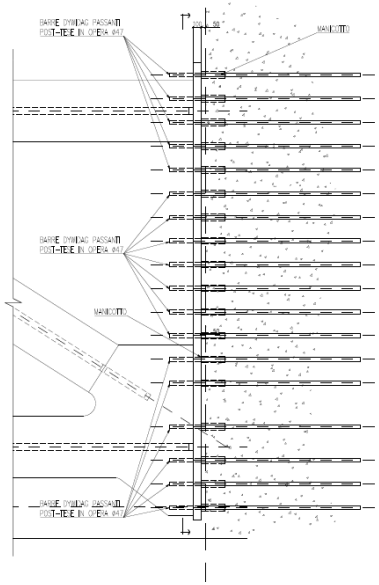

P23-P24

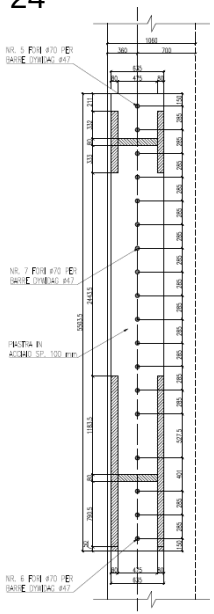

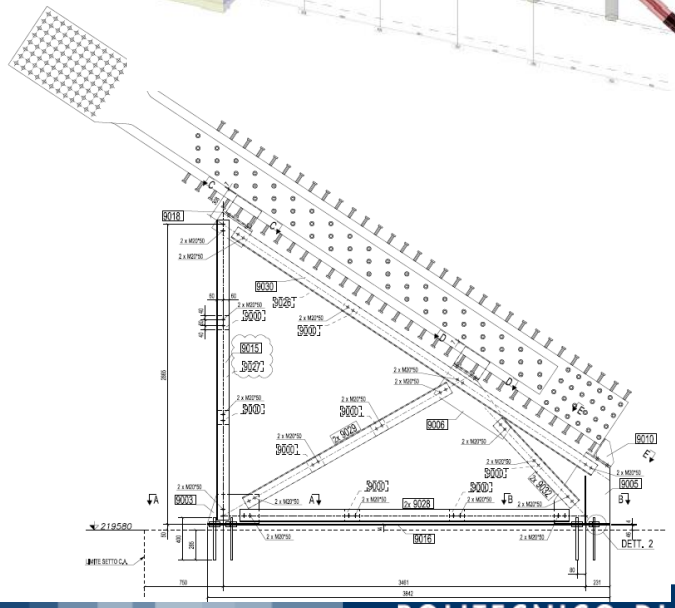

EXTRA HIGH LOAD TRANSMISSION
Allianz Tower - CityLife: top belt trusses

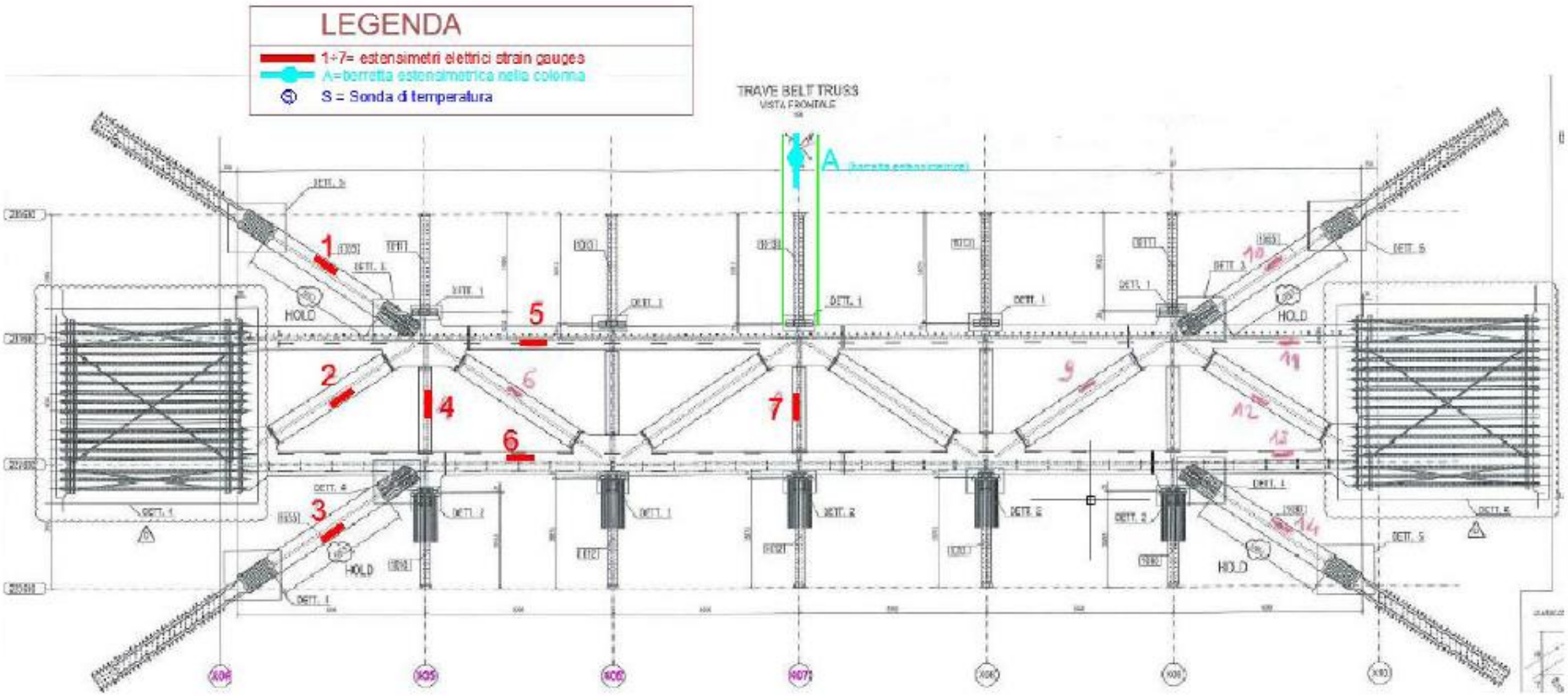

DESIGN, ANALYSIS AND VERIFICATION OF CONNECTIONS: BASIC PRINCIPLES (Elementary)

In principle, the action effect in a solid element is defined by a 6 components vector:

$$\underline{S} = \begin{vmatrix} N \\ V_x \\ V_y \\ M_x \\ M_y \\ T \end{vmatrix}$$

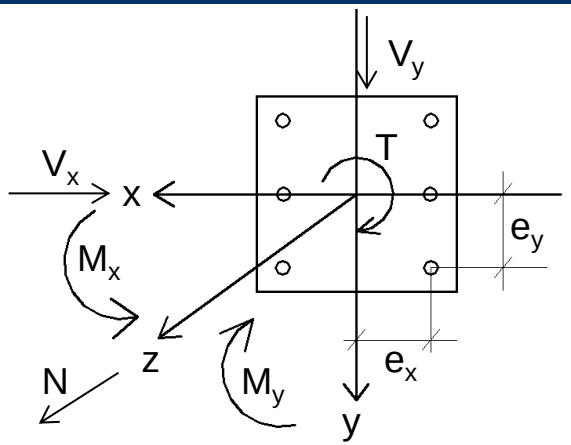

whereas the tension state in a connection element is defined by a 5 components vector :

$$\underline{S}_n = \begin{vmatrix} N_n \\ V_{xn} \\ V_{yn} \\ T_{xn} \\ T_{yn} \end{vmatrix}$$

Among which the first is normal, the others are tangential.

Assuming the same capacity for the elements and a rigid connection plate, it can be written:

$$N_n = N \cdot \frac{A_n}{\sum A_n} + M_x \cdot \frac{e_{xn} \cdot A_n}{\sum A_n \cdot e_{xn}^2} + M_y \cdot \frac{e_{yn} \cdot A_n}{\sum A_n \cdot e_{yn}^2}$$

$$V_{xn} = \frac{V_x}{n} \qquad V_{yn} = \frac{V_y}{n} \qquad T_{xn} = T \cdot \frac{A_n \cdot e_{yn}}{\sum A_n \cdot e_{yn}^2} \qquad T_{yn} = T \cdot \frac{A_n \cdot e_{xn}}{\sum A_n \cdot e_{xn}^2}$$

Composing the actions, for axial and shear forces on the connection, it can be written:

$$N_n{}^0 = N_n$$

$$V_n{}^0 = \sqrt{(V_{xn} + T_{xn})^2 + \left(V_{yn} + T_{yn}\right)^2}$$

They represent the two components of the demand vector S_{Ed}.

More complex formulations are reported in relevant Guidelines for various types of fasteners and arrangements

DESIGN, ANALYSIS AND VERIFICATION OF CONNECTIONS: BASIC PRINCIPLES: refined approach for capacity evaluation

The strength of a connection system cannot be reliably determined in a theoretical form.
It can be determined by means of a vast number of experiments from which different empyrical formulations have been developed

The capacity of a connection is affected by a number of parameters:

- Steel strength
- Concrete strength and state (cracked, uncracked)
- Geometrical configuration
- Connecting material strength
- Prestressing of the connection
- Group effects in case of multiple connectors
- Confinement effects induced on r.c. elements
- Dimensions of the r.c. element in relation with the diameter of the connectors
- Type of loads/actions (static, dynamic, sustained)
- Arrangement of reinforcement
- Type of resisting mechanism

The problem is thus quite complex and sensitive to the interaction of the different parameters affecting it.
Anyways, the first pioneering formulations adopted to define the capacity of a connection were based on a restricted number of statements:

a) Fragile failure mechanism, governed by the strength of concrete
b) Beneficial effect of confinement on the concrete element
c) Need to take into account the effects of combined actions

The formulation by H. Rasmussen was thus derived:

$$V_n{}^0 = 2.5 \cdot \emptyset^2 \sqrt{f_{cd} \cdot f_{yd}}$$

$$V_n{}^0 = 1.3 \cdot \left(\sqrt{1 + 1.69 \cdot \varepsilon^2} - 1.3\varepsilon\right) \cdot \emptyset^2 \sqrt{f_{cd} \cdot f_{yd}}$$

Based on which the formulation by Tassios was derived as reported in CEB/FIP MC 90

$$V_n{}^0 = \frac{1.3}{\gamma_{Rd}} \cdot \emptyset^2 \cdot \left\{\sqrt{1 + 1.3^2 \cdot \varepsilon^2} - 1.3\varepsilon\right\} (1 - \zeta^2) \cdot \sqrt{f_{cd} \cdot f_{yd}} \leq \frac{A_s \cdot f_{yd}}{\sqrt{3}}, \qquad \varepsilon = 3 \cdot \frac{e}{\emptyset} \cdot \sqrt{\frac{f_{cd}}{f_{yd}}}$$

DESIGN, ANALYSIS AND VERIFICATION OF CONNECTIONS: BASIC PRINCIPLES

- More recently, more complex formulations have been developed: the capacity is determined as the minimum between the one provided by concrete failure and the one by steel failure (CEB/Fib MC 2010; ACI Manual of Concrete Practice 349.2R, 355.R, 318, Ch.18, App.D, 12.6; fib bull. 58 Design of Anchorages in Concrete; Beton Kalender 'Design of fastenings for use in concrete' – The CEN/TS 1992-4 Provisions)

- These formulations are aimed at covering all the configurations of fasteners in terms of kind of connectors, type of resistance, type of associated mechanism

- The formulas are in product form and introduce many factors in order to take into account all the prerequisites that can influence the resistance of the connection
- The nature of actions nd the arrangement of the reinforcement have also to be carefully taken into account

DESIGN, ANALYSIS AND VERIFICATION OF CONNECTIONS: BASIC PRINCIPLES

- As an example, a concise relationship for the characteristic strength of an anchorage with bonded anchors can be written as follows:

$$R_{k,m}^{(j,m)} = R_{k,m}^{(0j)} \prod_{i=1}^{n_{j,m}} \psi_{i,m}$$

where

j identifies the resistance

m identifies the associated mechanism (concrete failure, combined pull-out and concrete failure, splitting, concrete edge failure)

$R_{k,m}^{(0j)}$ is the base characteristic resistance for the specified mechanism

$\psi_{i,m}$ are the factors affecting the resistance

- The design strength assumes the form:

$$R_{d,m}^{(j,m)} = R_{k,m}^{(j,m)} / \gamma_{M,m}$$

CONNECTION OF NON STRUCTURAL PARTS

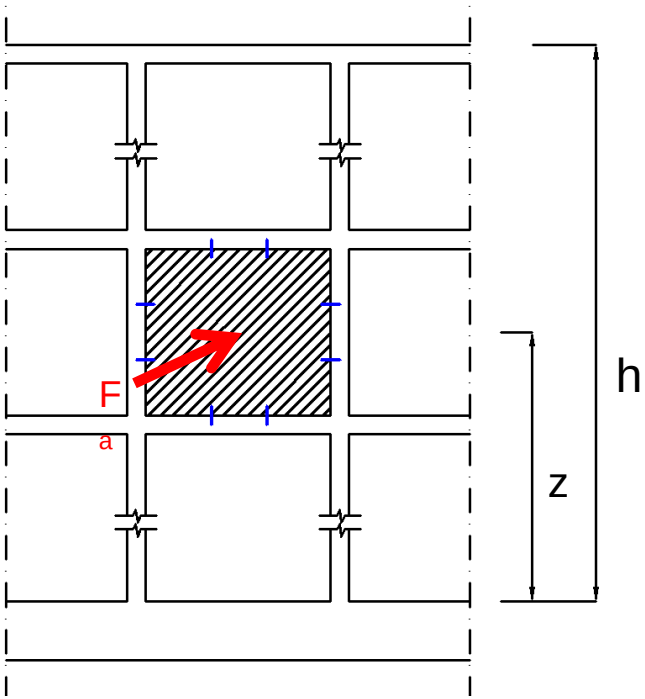

$$F_a = (S_a \cdot W_a \cdot \gamma_a)/q_a$$

$$S_a = \alpha S \cdot \left[\left(1 + \frac{z}{h}\right) \cdot A_a - \frac{1}{2}\right] \geq \alpha S$$

$$A_a = \frac{3}{1 + \left(1 - \frac{T_a}{T_1}\right)^2}$$

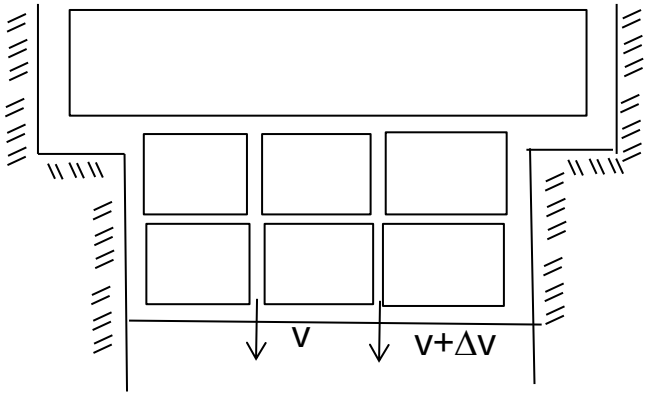

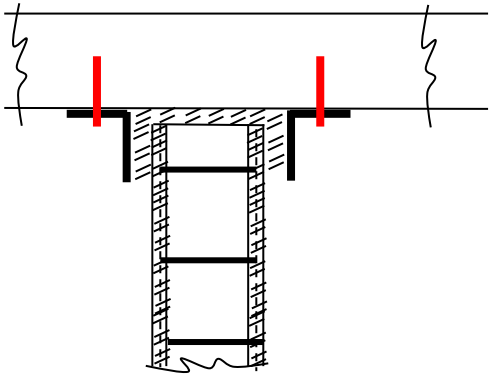

EFFECT OF STEEL REINFORCEMENT IN THE CONCRETE SURROUNDING

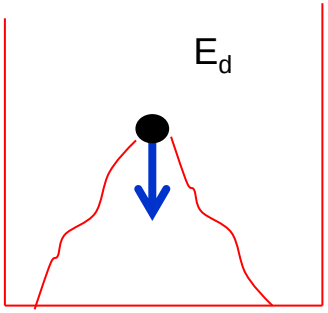

$R_{K,2}{}^{0(2,2)}$

Dowel action

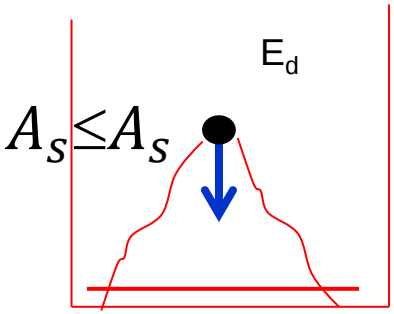

$1{,}2R_{K,2}{}^{0(2,2)}$

Improved Dowel

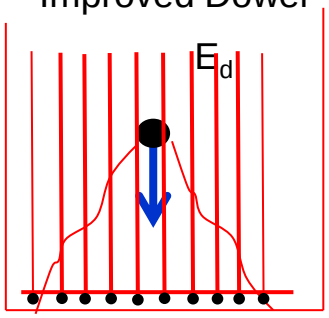

$1{,}4R_{K,2}{}^{0(2,2)}$

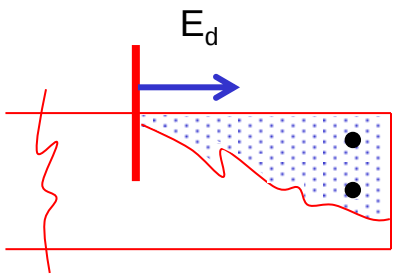

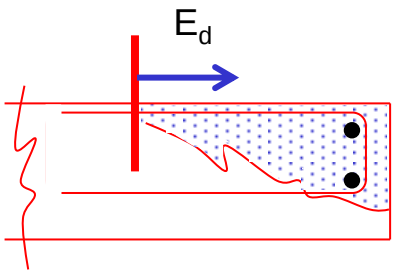

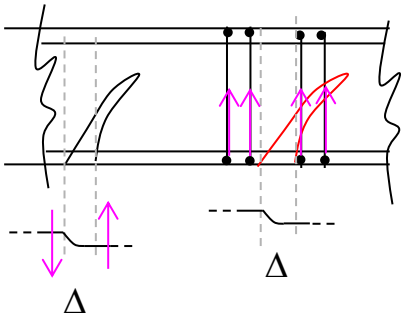

Pure dowel Improved dowel

$\beta_s \leq 2\%$

DESIGN, ANALYSIS AND VERIFICATION OF CONNECTIONS: BASIC PRINCIPLES

- Producers have drafted calculation manuals and guidelines, with worked design examples, through which designers can gather more information about how to choose, design and verify the connection system they need and to optimize its performance

- This approach is effective for small or medium intensity of the design loads. In special cases, when high loads need to be transferred by the connection system, specific analyses must be carried out to determine the capacity of the connection area as a system

- In these special cases, the design of the connection is not a routine process and requires engineering knowledge and skills, because it becomes crucial to guarantee structural safety and robustness